HYDAC INTERNATIONAL

Hydraulic Accessories

Valves, Clamps & Reservoir Accessories

W#02080105 / 01.17 / ACC1603-1753

Components, Systems and Service. All from one Company.

Our fluid engineering solutions are defined by the scope and complexity of our customers' requirements.

Our products range from individually designed components in the fields of fluid engineering, hydraulics and electronics right up to complete systems for specific functions.

All components and systems are conceived and designed in-house. Experienced industrial and product specialists develop innovative products and efficient solutions for high-quality, cost-effective production. Throughout the globe, our production facilities share one common goal: quality. We take great pride in both our products and solutions.

Industries and Applications

TABLE OF CONTENTS

	Section:
Valves Overview - **A-1**; Quick Reference Guide - **A-2**; Compatibility List - **A-4**; Materials Summary - **A-7**	A
High Pressure Ball Valves Standard Ball Valve Design Features and Options [KHB, KHM, KHP, KHB3K] - **A1-2**; Engineering Data - **A1-3**; 2-way Ball Valve with SAE & NPT Connections [KHB & KHM] - **A1-4**; 2-way Ball Valves with BSP & Metric Tube Connections [KHB & KHM] - **A1-6**; 2-way Ball Valves with Split Flange Connections [KHB & KHM] - **A1-8**; Direct Mount SAE Flange 1/2" to 2" [KHF3/6] - **A1-10**; Direct Mount SAE Flange 2 1/2" to 4" [KHF3] - **A1-11**; 2-way Manifold Mounted Ball Valves [KHP] - **A1-12**; 3 Piece Ball Valve [KHB3H] - **A1-14**; 3-way Diverter Ball Valves [KHB3K] - **A1-16**; Multiway Threaded [KH3, KH4] - **A1-18**; Actuator - **A1-20**; Locking Devices & Limit Switches - **A1-22**; Seal Kits - **A1-24**; Handles - **A1-24**	A1
Low Pressure Ball Valves 2-way Ball Valve [KHR] - **A2-2**; Resilient-seated Butterfly Valves [SLV] - **A2-5**; Brass Ball Valve [KHNVL] - **A2-8**; Stainless Steel Valve [KHNVN] - **A2-9**	A2
Process & Automated Valves Inline Isolation Valve + Actuator [HVA] - **A3-2**; Angle Seat Valve [ASV] - **A3-4**; Automated 2 Piece Ball Valve [KHL] - **A3-6**; Automated 3 Piece Ball Valve [KHM3L] - **A3-8**; Solenoid Valves - **A3-10**	A3
Coaxial Valves Overview - **A4-2**	A4
Flow Control Valves Design Features and Options] - **A5-2**; Needle Valves [DV, DVP] - **A5-3**; Flow Control Valves [DVR, DRVP] - **A5-7**; Pressure Compensated Flow Ctrls [SRVR] - **A5-11**; Check Valves [RV, RVP] - **A5-13**; Stainless Steel Flow Control Valves [DV, DRV, RV] - **A5-15**; Hose Break Valves [RB] - **A5-16**; Automatic Air Vent Valves [AEV] - **A5-20**	A5
Clamps Overview - **B-1**; Standard Solutions - **B-2**; Custom Solutions - **B-3**; Quick Reference Guide - **B-4**	B
DIN 3015 Clamps Overview - **B1-2**; Technical Specifications - **B1-3**; Standard Duty [HRL] - **B1-4**; Heavy Duty [HRS] - **B1-6**; Twin [HRZ] - **B1-8**; Standard Duty with Rubber Inserts [HREL] - **B1-10**; Heavy Duty with Rubber Inserts [HRES] - **B1-12**; Parts [HRL, HRS, HRZ] - **B1-14**; Clamps with Rubber Inserts [HREL & HRES] - **B1-17**; Parts [HRL, HRS, HRZ] - **B1-18**; SS Metal Components [HRL, HRS] - **B1-19**	B1
Standard Clamps HOM Series - **B2-2**; Cushion Clamps [CUSH] - **B2-3**; Buegu Clamps [HRBGS] - **B2-4**; U-Bolt Clamps [HRRBS] - **B2-6**; U-Bolt with Cushion Clamps [HUB] - **B2-7**; Oval Clamps [HROS] - **B2-8**; "P" Style Clamps [HSPN & HSPW] - **B2-9**; "P" Style Loop Clamps [HSVW & HLVZ] - **B2-10**; Quick Release Swivel Bolt [HRGKSM] - **B2-11**	B2
Custom Clamps Series Strip [HRRL, HRRLE] - **B3-2**; Power Cable Clamps [HY-ROFLEX] - **B3-3**; Swivel Bolt Band Clamps [HR(S)GBLPU] - **B3-4**	B3
Reservoir Accessories Overview - **C-2**	C
Breathers Overview - **C1-2**; BF Series - **C1-6**; Spin-on Breathers [BL] - **C1-17**; Drymicron [BDE] - **C1-19**; Mini Drymicron [BDZ] - **C1-21**; Filler Breathers [ELF] - **C1-22**	C1
Other Reservoir Accessories Suction Strainers [SFE, HTMS, MSS] - **C2-2**; Fluid Level Indicators [FSK, FSA] - **C2-9**; Electric Thermo Switch / TS Options - **C2-11**; Gauge Isolators [MA, MSL, MS] - **C2-13**; Test Points - **C2-17**; Gauges and Split Flanges - **C2-21**	C2

HYDAC

Accessory Division
2204 Avenue C
Bethlehem, PA 18017
+1.610.266.0100
Internet: www.hydac-na.com
Email: HYD.catalog@hydac-na.com

NOTE

Information and related materials are subject to change without notice. This catalog, and all information and related materials it contains, are provided "as is." HYDAC makes no representation or warranty whatsoever regarding the completeness, accuracy, "up-to-dateness", or adequacy of, the HYDAC-NA domain and this catalog.

HYDAC QuickShip PROGRAM

QuickShip with market driven lead times is available!

HYDAC is pleased to announce the re-launch of the QuickShip program, which includes some of our most popular parts from multiple product lines.

This program replaces the old Preferred Stock program. With the change, you may notice that some parts were removed, but others were added. These additions and deletions are a part of natural growth and changes within the program. The discount from the Preferred Stock program was retained.

How does it work?

- HYDAC Distributors place purchase orders with HYDAC Customer Service and use **"Quick"** as the quote number or mark their POs clearly as QuickShip. Only QuickShip parts can be entered on a QuickShip order.
- If a quantity larger than the maximum allowed by this program is needed, customers may split the quantity and order the maximum allowed by QuickShip on a QuickShip order and order the balance separately. The balance can be placed on a Rush order or a standard order and the appropriate discount will apply.
- Under this program, all parts purchased will receive the QuickShip discount (identical to the old Preferred Stock discount) unless they are ordered as a Rush or unless they are ordered on a standard or stock order to which a better discount would apply.
- All parts in this program will be available to ship within 5 business days.
- Customer may choose to use an expedited or unexpedited freight carrier.
- Our rush order policy is unaffected by this program.
- Please see our Distributor Website for a list of all QuickShip parts.
- Filters / Elements, Filter Systems, Compact Hydraulics, Accumulators, Coolers, Electronics, and Accessories are all a part of this program.
- HYDAC Standard Return Policy applies on all orders.

Please refer to our website for the most up-to-date information and offerings.

A Overview of Valves

OVERVIEW OF VALVES

Quick Reference Guide of Valves

Section	Type	Series	Product	Size	Pressure Rating	Pg. No.
A1 High Pressure Ball Valves	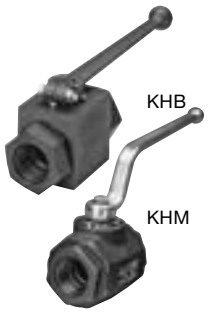	KHB, KHM	Ball Valves with NPT and SAE Threaded Connection	1/4” to 2”	Up to 7250 psi	A1-4
		KHB, KHM	Ball Valve with BSP and Metric Tube Connections	DN04—25	Up to 7250 psi (500 bar)	A1-6
		KHB, KHM	Ball Valve with SAE Split Flange Connections	1/4” to 2”	Up to 6000 psi	A1-8
		KHF3/6, KHF3	SAE Fixed Flange Ball Valves	1/2” to 4”	Up to 6000 psi	A1-10
		KHP	Manifold Mounted Ball Valves	3/8” to 2”	Up to 5000 psi	A1-12
		KHB3H	Three—Piece High—Pressure Ball Valve	1/2” to 4”	Up to 6000 psi	A1-14
		KHB3K	3/2 Way Ball Valves	1/4” to 2”	Up to 7250 psi	A1-16
		KH3, KH4	3—Way and 4—Way Ball Valves	1/4” to 3/4”	Up to 7250 psi	A1-18
		–	Ball Valve Actuators, Pnuematic Operation	—	—	A1-20
		—	Ball Valve Locking Devices	—	—	A1-22
	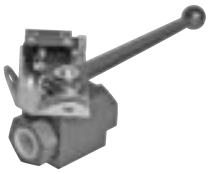	—	Ball Valves with Limit Switches	—	—	A1-23
		—	Seal Kits	—	—	A1-24

Quick Reference Guide of Valves *(continued)*

Section	Type	Series	Product	Size	Pressure Rating	Pg. No.
A2 Low Pressure Ball Valve		KHR	Aluminum Ball Valves	1/2” to 2”	Up to 400 psi	A2-2
		KHNVL	Brass Ball Valve	1/4” to 4”	Up to 600 psi	A2-8
		KHNVN	Stainless Steel	1/4” to 2”	Up to 1000 psi	A2-9
A3 Process & Automated Valves		HVA	Inline Isolation Valve & Actuator	3/8” to 2”	Up to 225 psi	A3-2
		ASV	Angle Seat Valve	3/8” to 2”	Up to 230 psi	A3-4
		KHL	Automated 2 Piece Ball Valve	1/4” to 2”	Up to 2000 psi	A3-6
		KHM3L	Automated 3 Piece Ball Valve	1/4” to 2”	Up to 1000 psi	A3-8
		Solenoid Valves	Namur 3-way and 4-way	—	—	A3-10
A4 CX Valves		CX	Coaxial Valves	—	—	A4-2
A5 Flow Control Valves	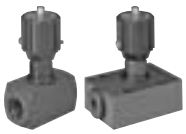	DV, DVP	Needle Valves	1/8” to 1 1/2”	Up to 5000 psi	A5-3
		SS DV				A5-15
		DRV, DRVP	Flow Control Valves	1/8” to 1 1/2”	Up to 5000 psi	A5-7
		SS DRV				A5-15
		SRVR	Pressure Compensated Flow Control Valves	1/4” to 3/4”	Up to 3000 psi	A5-11
	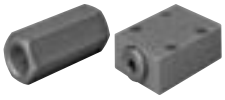	RV, RVP	Check Valves	1/8” to 2”	Up to 5000 psi	A5-13
		SS RV				A5-15
		RB, RBE	Hose Break Valves	—	Up to 5000 psi	A5-16
		AEV	Automatic Air Vent Valves	1/4”	Up to 8700 psi	A5-20

Compatibility List

For 2/2–, 3/2– and 4/2–Way Ball Valves

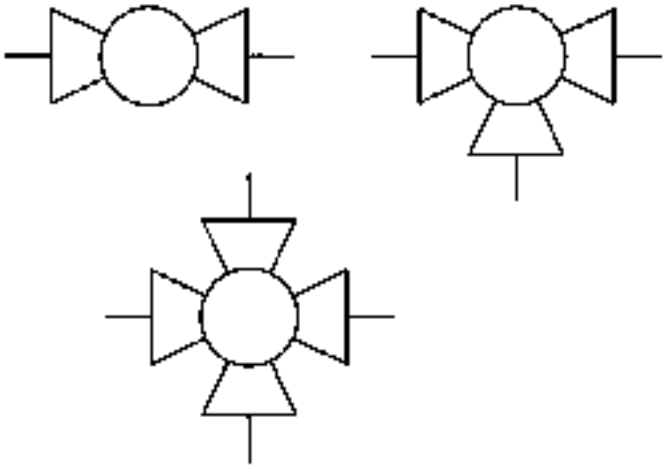

Medium	Ball valve materials: Housing, Ball, Control spindle: Steel	Brass	GG, GS—C	1.4571	Soft seals: NBR	FKM	Sealing cups: POM	PTFE
A								
Acetaldehyde	3	2	3	1	4	3	2	1
Acetic acid	3	3	3	1	4	4	4	1
Acetic anhydride	4	3	4	2	4	4	4	1
Acetone	1	1	1	1	4	4	2	2
Acetylene	1	4	1	1	2	2	2	2
Acrylonitrile	1	1	3	1	4	3	4	1
Air	1	1	1	1	1	1	1	1
Alcohol	4	4	4	4	4	1	1	1
Alum, aqueous	3	3	3	1	2	1	2	1
Aluminium chloride	3	3	3	1	2	1	1	1
Ammonia	1	4	2	1	3	4	2	1
Ammonium carbonate	2	4	2	2	3	3	3	1
Ammonium chloride	4	4	4	2	2	1	2	1
Ammonium phosphate, aqueous	4	4	4	2	2	1	2	1
Ammonium sulphate	3	4	3	2	2	1	2	1
Amyl acetate	3	3	3	2	4	4	2	1
Aniline	2	3	3	1	4	2	2	1
Argon gas	1	1	1	1	1	1	1	1
Aviation fuel JP 3–6	1	1	1	1	3	2	3	1
B								
Beer	4	1	4	1	1	1	1	1
Beet sugar solution	2	–	2	1	2	1	1	1
Benzene	2	2	2	2	4	3	2	1
Bitumen	1	2	2	1	4	2	3	1
Borax, aqueous	3	3	3	2	1	1	1	1
Boric acid, aqueous	3	3	4	2	1	1	2	1
Brake fluid	2	2	3	2	4	3	2	1
Brandy	2	2	3	2	2	1	2	1
Bromine	4	3	4	4	4	2	–	1
Brown coal tar	1	4	1	1	4	4	4	1
Butane, gaseous	2	1	2	2	2	2	2	1
Butter fat	4	4	4	1	1	4	1	1
Butyric acid, aqueous	4	3	4	2	2	2	2	1
C								
Cadmium chloride	4	4	4	1	1	4	4	1
Cadmium sulphate	1	1	1	1	1	1	1	1
Calcareous water	1	1	1	1	1	1	1	1
Calcium bisulphate, aqueous	4	2	4	2	2	2	2	1
Calcium carbonate	1	4	4	1	1	1	4	1
Calcium chloride, aqueous	3	2	3	2	1	1	1	1
Calcium hydroxide	3	1	3	2	1	1	2	1
Carbon dioxide	1	1	2	1	2	1	4	1
Carbon disulphide	3	3	3	2	4	1	2	1
Carbonic acid	2	4	4	2	2	2	2	1
Castor oil	2	1	2	1	1	1	1	1
Cellolube 220	1	1	1	1	4	1	1	1
Chlorine wet + dry	4	4	4	4	4	2	4	1
Chlorine, gaseous up to 100 °C	4	4	4	1	4	1	4	1
Chlorobenzene	2	2	2	1	4	2	2	1
Chloroform	2	2	2	1	4	2	4	1
Citric acid	4	2	4	2	2	1	2	1
Clophen A	1	1	1	1	4	1	4	1
Coal tar oil	1	1	1	1	4	2	3	1

Description

The HYDAC compatibility list is intended as a non—binding recommendation for the selection of materials for the housing, connection adapters, control spindle, ball and seals for ball valves.

The data given in this brochure is based on the tests, recommendations and experience of our suppliers. Given the immense variety of applications, media concentrations, pressures and temperatures, the data is intended to be a general guideline only.

NOTES
All the data applies to the usual concentrations of the media at room temperature, 20 °C. In individual cases we can select specific seal combinations and suitable materials for problematic operating conditions on request.

PN#02080105 / 01.17 / ACC1603-1753

Medium	Ball valve materials: Housing Ball Control spindle				Soft seals		Sealing cups	
	Steel	Brass	GG, GS—C	1.4571	NBR	FKM	POM	PTFE
C								
Coke oven gas	2	3	2	1	4	2	–	1
Condenser oil	1	4	1	1	4	1	1	1
Copper nitrate, aqueous	4	4	4	2	2	1	2	1
Copper sulphate, aqueous	4	4	4	2	2	1	2	1
Cresolyl, aqueous	3	3	4	2	4	2	4	1
Crude oil	2	2	2	1	2	1	1	1
Crude oil	2	2	2	1	2	1	2	1
Cutting oil	1	1	1	1	1	1	1	1
Cutting oil emulsion	3	3	2	2	1	2	1	1
D								
Diesel fuel	1	1	1	1	3	1	2	1
E								
Edible oil	4	4	4	1	1	4	4	1
Ethane	2	1	2	2	1	1	1	1
Ethanol	2	2	2	1	3	3	2	1
Ether	1	1	1	1	4	4	4	1
Ethyl acetate	2	3	2	2	4	4	2	1
Ethylene	2	–	2	1	2	2	2	1
F								
Faecal matter	1	4	1	1	1	1	1	1
Fatty acids	4	–	4	1	3	1	1	1
Fertilizer solution	4	3	4	3	4	4	–	1
Fire extinguishing substance	1	1	1	1	1	4	4	1
Fish oil	2	2	2	1	2	1	1	1
Formaldehyde	3	1	3	1	2	2	1	1
Formic acid	4	2	4	2	4	4	4	1
Freon	2	2	2	1	2	2	2	1
Fruit juices	4	3	4	1	2	1	1	1
Fuel oil, heavy	2	2	3	1	4	3	3	1
Fuel oil, light	2	2	2	1	3	2	3	1
Furan	1	4	4	1	4	4	4	1
Furfurol	1	1	2	1	4	4	2	1
G								
Gas liquor	2	2	2	2	2	1	2	1
Gas oil	2	2	2	1	3	1	2	1
Gasoline, pure	1	1	2	1	2	2	2	1
Gelatine	3	3	4	1	1	1	1	1
Glucose	2	1	2	1	1	1	2	1
Glycerine	2	2	2	1	1	2	3	1
Glycol	2	2	2	2	2	2	3	1
H								
Heavy oil	1	1	1	1	4	4	4	1
Heptane	2	1	2	1	2	1	1	1
Hexane	2	2	2	2	2	1	1	1
Hydraulic fluid, based on phosphate—ester	2	4	2	1	4	1	1	1
Hydraulic fluid, based on glycol	2	3	2	1	3	2	3	1
Hydraulic fluid, based on mineral oil	1	1	1	1	1	1	1	1
Hydrochloric acid	4	4	4	4	–	1	–	1
Hydrogen	2	2	2	1	2	2	–	1
Hydrogen peroxide	4	4	4	2	4	2	4	1
Hydrogen sulphide	3	4	4	2	3	2	3	1

Medium	Ball valve materials: Housing Ball Control spindle				Soft seals		Sealing cups	
	Steel	Brass	GG, GS—C	1.4571	NBR	FKM	POM	PTFE
I								
Ink	4	3	4	1	1	1	1	1
Iron chloride	4	2	4	4	2	1	3	1
Iron sulphate	4	2	4	2	3	1	1	1
Isobutyl alcohol	2	2	3	2	3	1	3	1
Isooctane	1	1	1	1	1	1	3	1
Isopropyl alcohol	2	2	3	2	3	1	2	1
Isopropyl ether	1	1	3	1	3	4	–	1
K								
Kerosene	2	2	2	1	2	1	1	1
Ketone	4	4	4	1	4	4	4	1
L								
Lacquers	2	1	2	1	4	3	2	1
Latex emulsion	2	1	2	1	–	–	1	1
Lead acetate, aqueous	4	3	4	1	4	2	3	1
Linseed oil	1	2	1	2	2	1	1	1
Lubricating oil	1	2	1	1	1	1	1	1
Lubricating oil, mineral	1	1	1	1	1	1	2	1
Lyes, alkaline	4	4	4	1	1	4	1	1
M								
Magnesium chloride	3	3	4	2	2	1	1	1
Magnesium hydroxide	2	4	2	1	2	1	1	1
Magnesium sulphate	3	2	3	2	2	1	1	1
Maleic anhydride	4	2	4	2	–	2	3	1
Malic acid	4	3	4	2	1	1	1	1
Mercury	1	4	1	1	1	1	1	1
Mercury chloride	4	4	4	3	2	1	4	1
Methane	2	1	2	2	1	1	2	1
Methanol	2	2	2	2	3	4	2	1
Methyl ethyl ketone	1	1	3	1	4	4	1	1
Methylamine, aqueous	2	4	2	1	4	4	–	1
Methylene bromide	4	1	4	4	4	1	3	1
Methylene chloride	2	1	3	1	4	3	3	1
Milk of lime	2	–	2	1	4	2	2	1
Mine gas	1	1	4	1	1	1	1	1
N								
Naphtha	2	2	2	1	2	1	1	1
Naphthalene	2	2	2	2	4	1	1	1
Natural gas	2	2	2	1	2	1	2	1
Nickel chloride	4	4	4	2	1	1	2	1
Nickel sulphate	4	4	4	2	2	1	2	1
Nitric acid	1	4	1	1	4	4	4	1
Nitrobenzene	–	4	3	1	4	3	4	1
Nitrogen	1	1	1	1	1	1	1	1
O								
Oil—water emulsion	1	1	1	1	1	1	1	1
Oleic acid	2	2	3	2	2	1	1	1
Oleum	3	4	3	2	4	2	4	1
Oxalic acid	4	4	4	2	2	1	3	1
Oxygen	2	1	3	1	4	2	4	1
Oxygen gas	1	1	1	1	1	1	1	1
Ozone	4	4	4	1	–	–	–	1
P								
Palm oil	4	4	4	1	4	1	1	1
Palmitic acid	2	2	2	2	2	1	2	1

OVERVIEW OF VALVES

Medium	Ball valve materials: Housing Ball Control spindle: Steel	Brass	GG, GS—C	1.4571	Soft seals: NBR	FKM	Sealing cups: POM	PTFE
P								
Paraffin	2	1	2	1	1	1	2	1
Pentane	2	1	2	1	1	1	2	1
Perchloroethylene	1	4	1	1	4	4	4	1
Petroleum	2	2	2	1	2	1	1	1
Phenol	2	2	2	2	4	2	4	1
Picric acid	4	3	4	1	2	1	–	1
Pine needle oil	2	2	2	1	2	1	2	1
Pit water	1	1	1	1	1	1	1	1
Potassium bromide, aqueous	4	3	4	1	2	1	2	1
Potassium carbonate, aqueous	2	2	2	2	1	1	2	1
Potassium chlorate, aqueous	2	2	2	2	4	1	2	1
Potassium chloride, aqueous	3	2	3	3	1	1	2	1
Potassium nitrate, aqueous	2	2	2	2	1	1	1	1
Potassium sulphate, aqueous	2	2	2	2	1	1	1	1
Propane	2	1	2	2	2	2	2	1
Propyl alcohol	4	1	4	1	4	–	–	1
Propylene glycol	2	2	2	2	2	1	3	1
Pydraul F9	1	1	1	1	4	1	1	1
S								
Salicylic acid	4	3	4	1	1	1	2	1
Silver nitrate	4	4	4	2	2	2	2	1
Soap solutions	1	1	2	1	1	1	1	1
Sodium bicarbonate	2	2	2	2	2	1	2	1
Sodium carbonate	2	2	2	2	2	1	2	1
Sodium chlorate	3	–	3	2	3	1	2	1
Sodium chloride	2	2	2	2	1	1	1	1
Sodium cyanide	2	4	2	2	2	1	2	1
Sodium hydroxide	2	2	2	1	3	3	–	1
Sodium hydroxide solution	4	4	4	1	1	4	4	1
Sodium nitrate	2	2	2	2	2	1	1	1
Sodium phosphate	3	2	3	1	2	1	2	1
Sodium silicate	2	2	2	2	2	1	2	1
Sodium sulphate	2	2	2	1	2	1	1	1
Sodium sulphide	2	4	3	2	2	1	2	1
Sodium sulphite, aqueous	4	–	4	1	4	3	3	1
Sodium thiosulphate	2	3	2	1	4	1	1	1
Solvents	2	2	2	1	4	3	2	1
Spirit	1	1	1	1	4	4	4	1
Steam (water)	2	1	2	1	4	4	4	1
Stearic acid	3	3	3	2	1	1	1	1
Styrene	1	1	2	1	4	2	2	1
Sugar solution	4	4	4	1	1	4	1	1
Sulphur	3	4	3	2	4	1	2	1
Sulphur dioxide	2	2	2	1	4	1	2	1
Sulphuric acid	2	3	2	1	4	2	4	1
T								
Tannic acid	3	2	3	1	2	2	1	1
Tartaric acid	4	2	4	2	2	1	2	1
Tin chloride	4	4	4	4	2	1	2	1
Toluene	1	1	1	1	4	2	2	1
Town gas	1	1	1	1	2	1	2	1
Transformer oil	1	2	2	1	2	2	1	1
Transmission oil	1	1	1	1	1	1	1	1
Tributyl phosphate	2	2	2	1	4	3	–	1

Medium	Ball valve materials: Housing Ball Control spindle: Steel	Brass	GG, GS—C	1.4571	Soft seals: NBR	FKM	Sealing cups: POM	PTFE
T								
Trichloroacetic acid	4	4	4	1	4	4	4	1
Trichloroethylene	2	3	3	2	4	3	3	1
Turbine oil	1	1	1	1	4	1	4	1
Turpentine oil	3	2	2	2	2	1	1	1
Urea, aqueous	3	2	3	2	2	2	2	1
V								
Vinegar	4	3	4	1	3	2	4	1
Vinyl chloride	2	3	2	2	4	3	2	1
Viscose	1	4	1	1	1	4	1	1
Volatile oils	2	2	2	1	3	2	2	1
W								
Water up to 180 °C.	2	1	2	1	4	4	4	1
Water up to 80 °C.	2	1	2	1	2	2	2	1
Water, distilled	4	1	4	1	2	2	2	1
Water, sea water	4	2	4	2	3	2	3	1
Wax	1	1	1	1	3	2	1	1
X								
Xylenes	2	1	2	1	4	2	1	1
Z								
Zinc chloride	4	4	3	4	3	1	2	1
Zinc sulphate	4	2	4	2	1	1	2	1

1 = recommended
2 = mostly suitable
3 = probably suitable
4 = not recommended
– = not yet determined

Note:
Medium tested at room temperature 20 °C

PN#02080105 / 01.17 / ACC1603-1753

Materials Summary and Applications of the Materials in HYDAC Ball Valves.

Housing, connection adapter, control spindle and ball:

Material Code	Material	Application
1	Carbon Steel 9SMnPb28K	General oil hydraulics without special materials requirement.
2	Brass (MS58)	General oil and water hydraulics with increased corrosion protection requirements. Low and medium pressure range.
3	Stainless steel (1.4571)	Special application in the chemical and power industry with high corrosion protection requirements of the material.
5	Structural steel (ST52—3)	General oil and water hydraulics with special materials requirement.
6	Tempered steel (C 22.8)	General oil and water hydraulics with special materials requirement.
8	Cast iron (GG25)	Low pressure applications with good corrosion resistance.
10	Cast steel (GS—C 25)	High temperature applications with high stability values. Poor corrosive property.

Material of ball seal cup:

Material Code	Material	Application
1	Polyacetal (POM)	Primarily for high pressure hydraulics in the temperature range from — 20 °C to + 100 °C. Operating pressure up to max. 500 bar. Not resistant to aggressive media.
3	PTFE	Given the excellent chemical and thermal properties, the application ranges are varied. Temperature range from — 200 °C to + 100 °C. Temperatures up to 200 °C possible at reduced pressures. Operating pressure up to max. 100 bar.
8	Victrex— Peek	Good chemical and thermal properties. Temperature range from — 150 °C to + 200 °C. Operating pressure up to max. 500 bar.

Material of O-Rings on the control spindle and the connection adapters:

Material Code	Material	Application
2	Perbunan (NBR)	General hydraulics. Temperature range from — 20 °C to + 100 °C. Operating pressure up to max. 500 bar
4	(FKM)	General hydraulics, however primarily for aggressive media. Temperature range from — 10 °C to + 200 °C. Operating pressure up to max. 500 bar.
5	EPR	Ethylene Propylene Rubber

*Not all material combinations are available for all valves. Call HYDAC for more information.

Notes

A1

High Pressure Ball Valves

The HYDAC family of dependable high pressure ball valves provides full, unrestricted flow and positive shut-off of fluids and gases under extreme service conditions. Models are available to accommodate system pressures up to 7,250 PSI. Since a variety of materials are available, HYDAC valves can be used with various fluids and gases including petroleum based oils and some water glycols.

KHB, KHM, KHP, KHB3K Series

Standard Ball Valve Design Features and Options

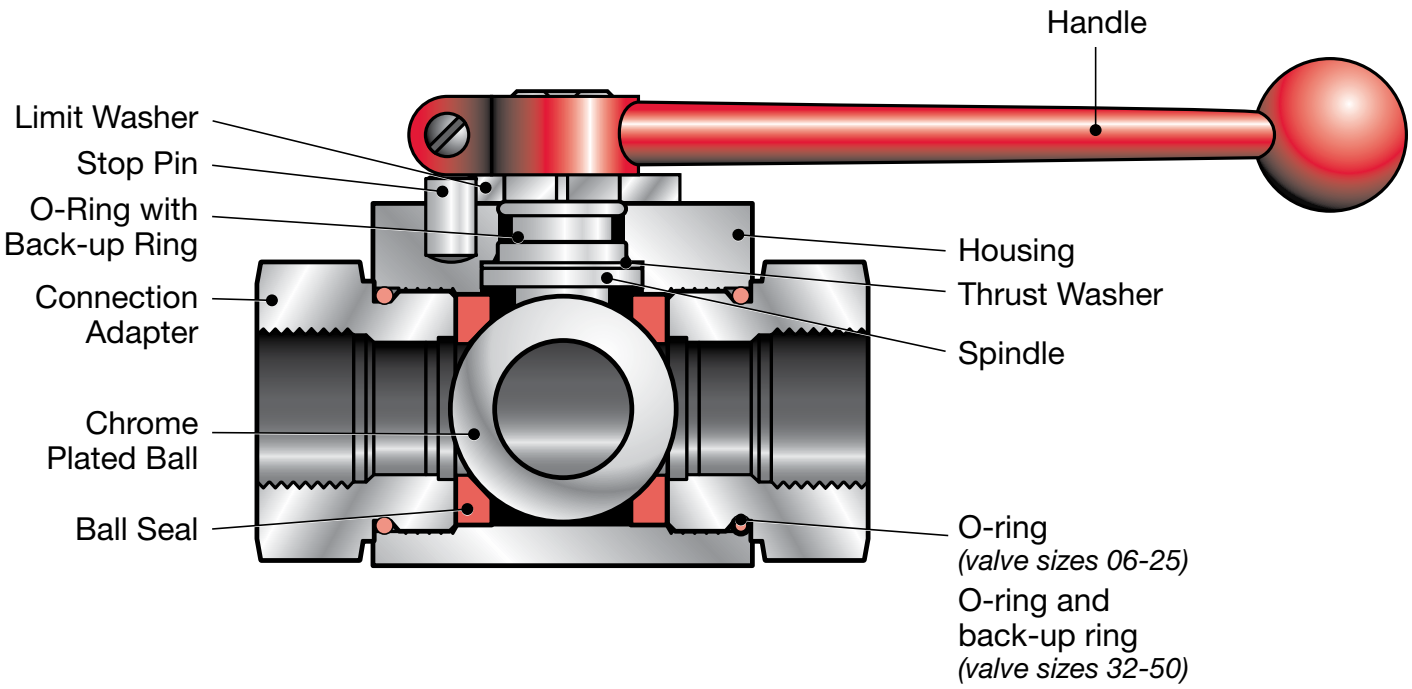

Description

The HYDAC family of dependable high pressure ball valves provides full, unrestricted flow and positive shut-off of fluids and gases under extreme service conditions. Models are available to accommodate system pressures up to 7,250 PSI. Since a variety of materials are available, HYDAC valves can be used with various fluids and gases including petroleum-based oils and some water glycols.

Valve Design

The design of HYDAC ball valves is based on the "floating ball" principle which allows the ball to turn freely between the ball seals. A positive seal is attained by fluid pressure acting on the upstream surface of the ball and producing a constant uniform contact between the downstream ball seal and the ball. The ball is operated by a sealed spindle with a projecting square end to which the control handle or optional actuator is attached. *Ball valves are intended to be used as on/off flow control devices and are not to be used to throttle fluid flow. The valves should always be either fully open or closed.*

Features

- Full passage for unrestricted flow of medium
- Floating ball provides positive seal
- Direction of flow indicated by milled slot in control spindle
- Valve positioning controlled by a stop pin and limit washer
- Fluoroelastomer O-rings *(standard)*
- Zinc plated carbon steel valve body *(standard)* NEW

Available Options

HYDAC can furnish ball valves with special options including:

- Locking devices
- Stainless steel valve bodies
- Pneumatic or electrical actuators
- Limit switch
- Off-set or straight control handles
- Custom solutions - Contact HYDAC

Product Improvements:

Zinc Plating: Carbon Steel Valves now come with Zinc Plating as the standard surface finish. Corrosion protection is improved.

Pressure Rating: Standard Carbon Steel Valves now rated up to 6000psi see specific product pages for details.

PN#02080105 / 01.17 / ACC1603-1753

Engineering Data

Housing
Block Type (KHB) Carbon Steel *(standard)* 14˚F Min temp
Forged Type (KHM) Forged Steel *(standard)* 14˚F Min temp Stainless Steel *(optional)* -40˚F Min temp
Coatings Standard Models Phosphate Coated *(Others available on Request)*
Ball
Chrome Plated Steel *(standard)* Stainless Steel *(optional)*
Spindle
Zinc Plated Steel *(standard)* Stainless Steel *(optional)*
Handles *(see page A1-24)*
11X Straight Aluminum, Red Anodized
12X Offset Aluminum, Red Anodized
16X Offset Steel, Galvanized
Ball Seal
Polyacetal (POM) Standard for Hydraulic Oils, Water Glycol Maximum Pressure: to 7250 psi (500 bar) Temperature Range: -22° to 212°F (-30° to 100°C)
PTFE For Corrosive Media Maximum Pressure: to 1500 psi (100 bar) Temperature Range: -328° to 212°F (-200° to 100°C) ***Temperature to 392°F (200°C) at reduced Pressure*** *(see chart below for pressure-temperature profile)*
NBR For Gaseous Media Maximum Pressure: to 1500 psi (100 bar) Temperature Range: -13° to 212°F (-25° to 100°C) *(see chart below for pressure-temperature profile)*
PEEK High Temperature Seal Maximum Pressure: to 7250 psi (500 bar) Temperature Range: -238° to 212°F (-150° to 100°C) ***Better high temperature profile than PTFE Temperature to 482°F (250°C) at reduced Pressure*** *(see chart below for pressure-temperature profile)*
Spindle Seal & O-rings
Fluorocarbon (FPM) Standard for hydraulic oils and many acids Maximum Pressure: to 7250 psi (500 bar) Temperature Range: -4° to 392°F (-20° to 200°C)
NBR Seal for hydraulic oils, lubricants, greases Maximum Pressure: to 7250 psi (500 bar) Temperature Range: -13° to 212°F (-25° to 100°C)
PTFE for corrosive media and bases Maximum Pressure: to 1500 psi (100 bar) Temperature Range: -328° to 212°F (-200° to 100°C) Temperature to 392°F (200°C) at reduced pressure
EPR Ethylene Propylene Rubber for some phosphate esters Maximum Pressure: to 7250 psi (500 bar) Temperature Range: -58° to 300°F (-50° to 150°C)
Special Seals
Other materials are available for special applications. Consult HYDAC for your specific application.

Press-Temp Curve For Different Ball Seal Materials

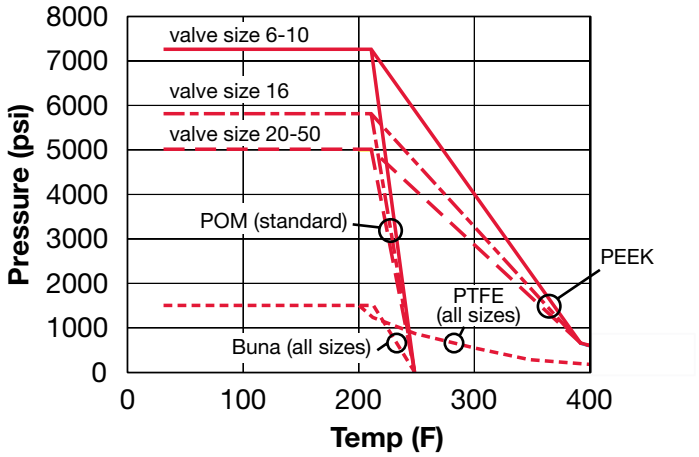

KHB & KHM Series

2-way Ball Valves with SAE & NPT Connections

KHB Series
Block Housing

KHM Series
Forged Housing

Specifications

- 1/4” - 2” Full Port Design
- NPT or SAE O-Ring Connections
- Carbon Steel or Stainless Steel Housings
- Block Housing: Sizes 06 - 25
- Forged Housing: Sizes 32 - 50
- Ball Seals: Polyacetal *(standard)*
- O-Rings: Fluoroelastomer *(FPM) (standard)*
- Operating Pressure: to 7250 psi depending on valve size and seal materials selected
- Temperature Range: 14˚F to 176˚F with standard materials *(1114)* up to maximum pressure rating. Extended temperature range -40˚F to 392˚F on request with special materials and reduced pressure rating *(see page A1-3)*.

Model Code

KHB - 16 NPT - 1 1 1 4 - 11X - A - L

Housing Type
- KHB = Block Housing, Sizes 06 - 25
- KHM = Forged Housing, Sizes 32 - 50

Nominal Sizes

Nom Size	SAE Tube Size	SAE Thread Size	NPT Pipe Size	NPT Pipe øD
06	-4	7/16-20 UNF	1/4”	0.540”
10	-6	9/16-18 UNF	3/8”	0.675”
16	-8	3/4-16 UNF	1/2”	0.840”
20	-12	1-1/16-12 UN	3/4”	1.050”
25	-16	1-5/16-12 UN	1”	1.315”
32	-20	1-5/8-12 UN	1-1/4”	1.660”
40	-24	1-7/8-12 UN	1-1/2”	1.900”
50	-32	2-1/2-12 UN	2”	2.375”

Connection Type
- NPT = ANSI/ASME 1.20.1 Taper Pipe Thread
- SAE = SAEJ1926 Ports with ISO 725 Threads and O-Ring Sealing

Body Material
- 1 = Carbon Steel
- 3 = Stainless Steel

Spindle and Ball Material
- 1 = Carbon Steel *(ball is chrome plated, spindle is zinc plated)*
- 3 = Stainless Steel

Ball Seal Material
- 1 = Polyacetal *(standard)*
- 3 = PTFE *(1500 psi max)*
- 8 = PEEK

O-Ring Material
- 2 = NBR *(Buna)*
- 3 = PTFE Spindle Seals and FPM *(fluoroelastomer)* O-Rings *(1500 psi max)*
- 4 = FPM *(fluoroelastomer) (standard)*
- 5 = EPR

Handle Codes
- 09x = Without Handle *(see page A1-24 to order handle separately)*
- 11x = Straight Aluminum, Sizes 06-25
- 16x = Offset Steel, Sizes 32-50
- 18x = Offset Stainless Steel - option for stainless valves size 06-50

Housing Surface Finish
- A = Zinc plated *(standard for all carbon steel valves)*
- *(omit)* = No plating for Stainless Steel

Locking Device Option
- L = Locking Device *(see page A1-22 to order locking device separately)*
- LS = Locking Device with 5 amp Limit Switch, Available for sizes 20-50 *(Not available with PTFE Spindle Seals)*

Dimensions

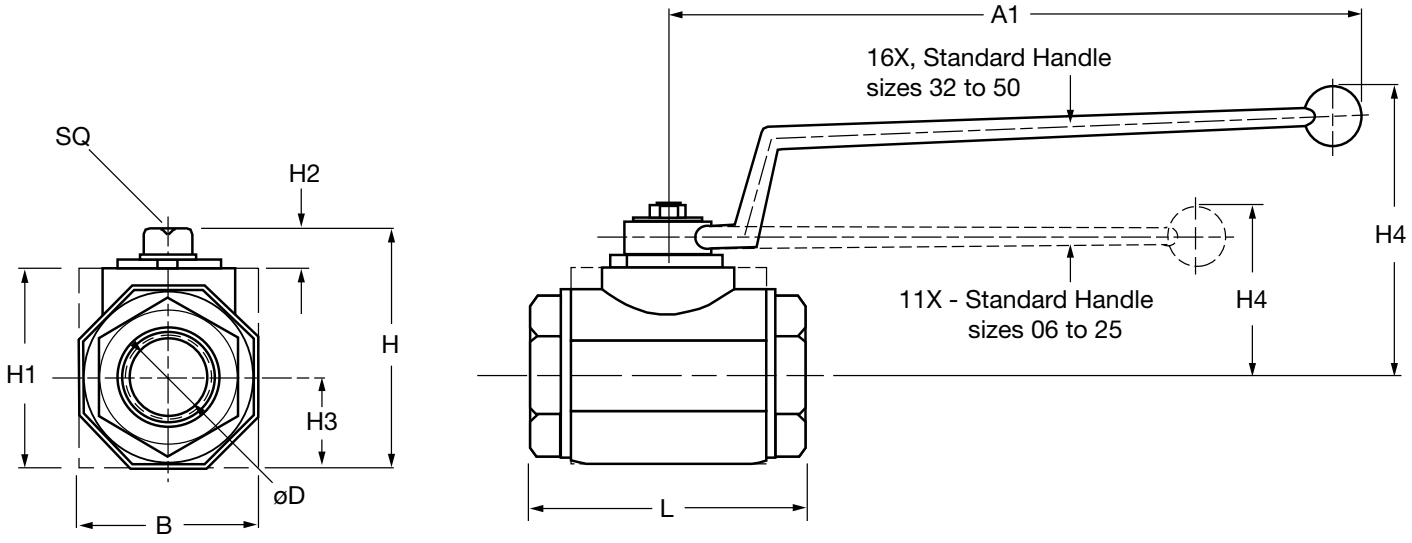

NPT Port
Internal Thread

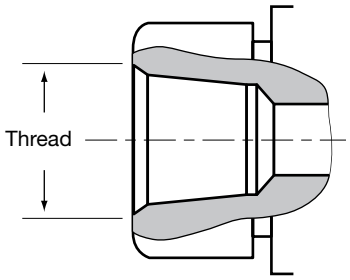

SAE Port
Straight Thread
O-Ring Boss

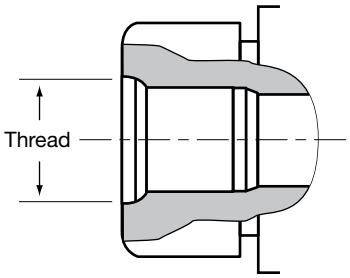

Model	Thread	Max. psi*	A1	B	øD	H	H1	H2	H3	H4	L	SQ	Weight
KHB-06SAE	7/16-20UNF (SAE 4)	7250	5.91 (150)	0.98 (25)	0.24 (6)	1.89 (48)	1.38 (35)	0.28 (7)	0.51 (13)	1.65 (42)	2.72 (69)	0.35 (9)	0.66 (0.3)
KHB-06NPT	1/4” NPT												
KHB-10SAE	9/16-18UNF (SAE 6)	7250	5.91 (150)	1.26 (32)	0.39 (10)	2.09 (53)	1.57 (40)	0.33 (8.5)	0.67 (17)	1.69 (43)	2.83 (72)	0.35 (9)	1.10 (0.5)
KHB-10NPT	3/8” NPT												
KHB-16SAE	3/4-16UNF (SAE 8)	6000 CS 5800 SS	6.88 (175)	1.50 (38)	0.63 (16)	2.48 (63)	1.77 (45)	0.43 (11)	0.75 (19)	2.01 (51)	3.27 (83)	0.47 (12)	1.65 (0.75)
KHB-16NPT	1/2” NPT												
KHB-20SAE	1-1/16-12UN (SAE 12)	6000 CS 5000 SS	7.88 (200)	1.89 (48)	0.79 (20)	2.95 (75)	2.24 (57)	0.43 (11)	0.96 (24.5)	2.28 (58)	3.74 (95)	0.55 (14)	2.87 (1.3)
KHB-20NPT	3/4” NPT												
KHB-25SAE	1-5/16-12UN (SAE 16)	6000 CS 5000 SS	7.88 (200)	2.24 (57)	0.98 (25)	3.23 (82)	2.52 (64)	0.43 (11)	1.12 (28.5)	2.40 (61)	4.45 (113)	0.55 (14)	4.41 (2.0)
KHB-25NPT	1” NPT												
KHM-32SAE	1-5/8-12UN (SAE 20)	6000 CS 5000 SS	12.00 (305)	2.95 (75)	1.18 (30)	4.06 (103)	3.35 (85)	0.47 (12)	1.48 (37.5)	5.94 (151)	4.33 (110)	0.67 (17)	6.84 (3.1)
KHM-32NPT	1-1/4” NPT												
KHM-40SAE	1-7/8-12UN (SAE 24)	6000 CS 5000 SS	12.00 (305)	3.35 (85)	1.50 (38)	4.49 (114)	3.78 (96)	0.47 (12)	1.67 (42.5)	6.18 (157)	5.12 (130)	0.67 (17)	9.70 (4.4)
KHM-40NPT	1-1/2” NPT												
KHM-50SAE	2-1/2-12UN (SAE 32)	6000 CS 5000 SS	12.00 (305)	4.13 (105)	1.89 (48)	5.18 (131.5)	4.43 (112.5)	0.47 (12)	2.07 (52.5)	6.46 (164)	5.51 (140)	0.67 (17)	14.55 (6.6)
KHM-50NPT	2” NPT												

*Dependent upon valve and seal materials selected.
Notes:
1. Note difference in pressure ratings for Carbon Steel (CS) and Stainless Steel (SS).
2. Dimensions are in inches (mm) and lbs (kg).
3. Dimensions are for general information only, all critical dimensions should be verified by requesting a certified print.

KHB & KHM Series

2-way Ball Valves with BSP & Metric Tube Connections

KHB Series
Block Housing

KHM Series
Forged Housing

Specifications

- 1/4" - 2" Full Port Design
- BSP or DIN2353 Connections
- Carbon Steel or Stainless Steel Housings
- Block Housing: Sizes 06 - 25
- Forged Housing: Sizes 32 - 50
- Ball Seals: Polyacetal *(standard)*
- O-Rings: Fluoroelastomer *(FPM) (standard)*
- Operating Pressure to 7250 psi (500 bar) depending on valve size and seal materials selected
- Temperature Range: 14˚F to 176˚F with standard materials *(1114)* up to maximum pressure rating. Extended temperature range -40˚F to 392˚F on request with special materials and reduced pressure rating *(see page A1-3)*.

Model Code

KHB - 16 SR - 1 1 1 4 - 11X - A - L

Housing Type
- KHB = Block Housing, DN 06 - 25
- KHM = Forged Housing, DN 32 - 50

Nominal Sizes

Nom Size	G (BSP)	LR		SR	
DN04	-	06LR	M12X1.5	08SR	M16X1.5
DN06	G1/4	08LR	M14X1.5	10SR	M18X1.5
DN08	-	10LR	M16X1.5	12SR	M20X1.5
DN10	G3/8	12LR	M18X1.5	14SR	M22X1.5
DN12	-	15LR	M22X1.5	16SR	M24X1.5
DN16	G1/2	18LR	M26X1.5	20SR	M30X2
DN20	G3/4	22LR	M30X1.5	25SR	M36X2
DN25	G1	28LR	M36X1.5	30SR	M42X2
DN32	G11/4	35LR	M45X1.5	-	M52X2
DN40	G11/2	42LR	M52X1.5	-	-
DN50	G2	-	-	-	-

Connection Type
- G = BSP ports with ISO 228 threads
- LR = Light Range Metric Tube Connections, DIN 2353
- SR = Heavy Range Metric Tube Connections, DIN 2353

Body Material
- 1 = Carbon Steel
- 3 = Stainless Steel

Spindle and Ball Material
- 1 = Carbon Steel *(ball is chrome plated, spindle is zinc plated)*
- 3 = Stainless Steel

Ball Seal Material
- 1 = Polyacetal *(standard)*
- 3 = PTFE *(1500 psi max)*
- 8 = PEEK

O-Ring Material
- 2 = NBR *(Buna)*
- 3 = PTFE Spindle Seals and FPM *(fluoroelastomer)* O-Rings *(1500 psi max)*
- 4 = FPM *(fluoroelastomer) (standard)*
- 5 = EPR

Handle Codes
- 09x = Without Handle *(see page A1-24 to order handle separately)*
- 11x = Straight Aluminum, Sizes 06-25
- 16x = Offset Steel, Sizes 32-50
- 18x = Offset Stainless Steel - optional for Stainless Steel valves, all sizes

Housing Surface Finish
- A = Zinc plated *(standard for all Carbon Steel valves)*
- *(omit)* = No plating *(for Stainless Steel Valves)*

Locking Device Option
- L = Locking Device *(see page A1-22 to order locking device separately)*
- LS = Locking Device with 5 amp Limit Switch, Available for sizes 20-50 *(Not available with PTFE Spindle Seals)*

PN#02080105 / 01.17 / ACC1603-1753

Dimensions

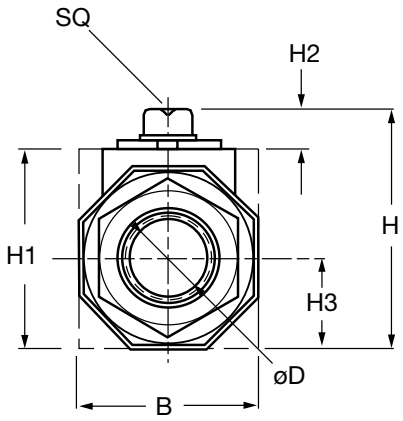

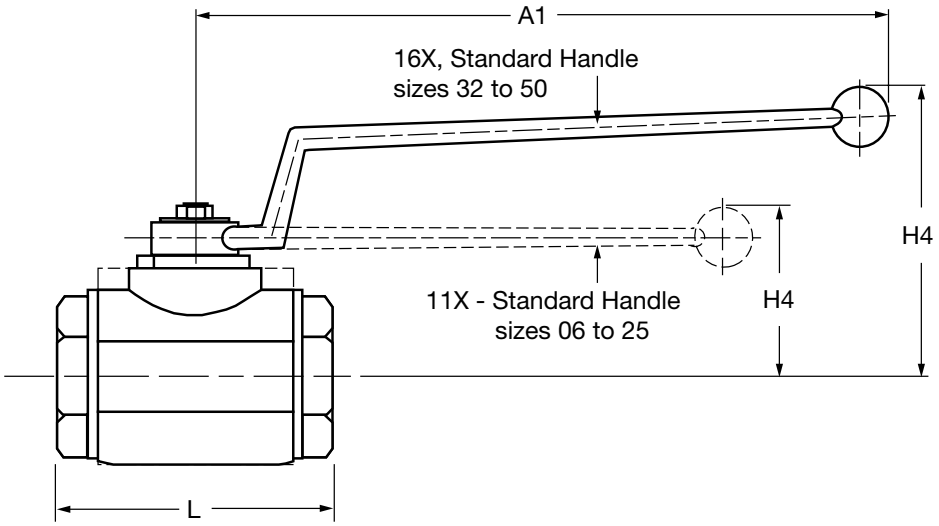

Connection Type	Type	DN	øD	RA	d1	l	L	L1	B	H	h1	h2	h3	SW1	SW2	Weight (kg)	Nom. pressure PN (bar)
DIN ISO 228 Female thread	KHB-G1/4	6	8	–	G1/4	14	69	37	28	44	14	33	7	9	22	0.32	500
	KHB-G3/8	10	10	–	G3/8	14	72	42	32	53	17	40	8,5	9	27	0.46	500
	KHB-G1/2	16	15	–	G1/2	16	83	47	40	62	20	46	11	12	32	0.7	420
	KHB-G3/4	20	20	–	G3/4	18	95	60	49	75	24.5	57	11.6	14	41	1.3	420
	KHB-G1	25	25	–	G1	20,5	113	65	58	82	28.5	65	11.6	14	50	2.03	420
	KHM-G11/4	32	30	–	G11/4	22	109.4	83.4	82	106.2	40	87.7	12	17	60	3.1	420
	KHM-G11/2	40	38	–	G11/2	24	130	91	94	118.2	45	99.7	12	17	70	4.4	420
	KHM-G2	50	48	–	G2	28	140	100	111	134.2	55.5	115.7	12	17	80	6.6	420
DIN 2353 Light range	KHB-06LR	4	4	6	M12x1.5	7	67	37	28	44	14	33	7	9	22	0.26	500
	KHB-08LR	6	6	8	M14x1.5	7	67	37	28	44	14	33	7	9	22	0.26	500
	KHB-10LR	8	8	10	M16x1.5	11	74	42	32	53	17	40	8.5	9	27	0.43	500
	KHB-12LR	10	10	12	M18x1.5	11	74	42	32	53	17	40	8.5	9	27	0.43	500
	KHB-15LR	12	12	15	M22x1.5	12	82	47	40	62	20	46	11.6	12	32	0.64	420
	KHB-18LR	16	15	18	M26x1.5	12	82	47	40	62	20	46	11	12	32	1.25	420
	KHB-22LR	20	19	22	M30x2	14	101	60	49	75	24.5	57	11.6	14	41	1.54	420
	KHB-28LR	25	24	28	M36x2	14	108	65	58	82	28.5	65	11.6	14	50	1.54	420
	KHM-35LR	32	30	35.3	M45x2	16	141.4	83.4	82	106.2	40	87.7	12	17	60	3.36	420
	KHM-42LR	40	36	42.3	M52x2	16	162	91	94	118.2	45	99.7	12	17	70	4.88	420
DIN 2353 Heavy range	KHB-08SR	4	5	8	M16x1.5	7	73	37	28	44	14	33	7	9	22	0.28	500
	KHB-10SR	6	7	10	M18x1.5	7,5	73	37	28	44	14	33	7	9	22	0.32	500
	KHB-12SR	8	8	12	M20x1.5	12	76	42	32	53	17	40	8.5	9	27	0.45	500
	KHB-14SR	10	10	14	M22x1.5	14	80	42	32	53	17	40	8.5	9	27	0.46	500
	KHB-16SR	12	12	16	M24x1.5	14	86	47	40	62	20	46	11.6	12	32	0.65	420
	KHB-20SR	16	15	20	M30x2	16	90	47	40	62	20	46	11	12	32	0.67	420
	KHB-25SR	20	20	25	M36x2	18	109	60	49	75	24.5	57	11.6	14	41	1.32	420
	KHB-30SR	25	25	30	M42x2	20	120	65	58	82	28.5	65	11.6	14	50	1.87	420
	KHM-38SR	32	30	38.3	M52x2	22	153.4	83.4	82	106.2	40	87.7	12	17	60	3.43	420

Notes:
1. Dimensions are in (mm), (kg) and (bar).
2. Dimensions are for general information only, all critical dimensions should be verified by requesting a certified print.

KHB & KHM Series

2-way Ball Valves with Split Flange Connections

KHB Series
Block Housing

KHM Series
Forged Housing

Specifications

- 1/2” - 2” Full Port Design
- SAE Code 61 and 62 Split Flange Connections
- Carbon Steel or Stainless Steel Housings
- Block Housing: Sizes 16 - 25
- Forged Housing: Sizes 32 - 50
- Ball Seals: Polyacetal *(standard)*
- O-Rings: Fluoroelastomer *(FPM) (standard)*
- Operating Pressure: to 6000 psi depending on valve size and seal materials selected
- Temperature Range: 14˚F to 176˚F with standard materials *(1114)* up to maximum pressure rating. Extended temperature range -40˚F to 392˚F on request with special materials and reduced pressure rating *(see page A1-3)*.

Model Code

KHB - 20 F3 - 1 1 1 4 X - 12X - A - L

Housing Type
- KHB = Block Housing - Sizes 16-25
- KHM = Forged Housing - Sizes 32-50

Nominal Sizes

Valve Size	Nominal Flange Size	Flange Dash Size
16	1/2”	-8
20	3/4”	-12
25	1”	-16
32	1-1/4”	-20
40	1-1/2”	-24
50	2”	-32

Connection Type
SAE J518 Four bolt split flange type:
- F3 = Standard Pressure Series, Code 61
- F6 = High Pressure Series, Code 62

Body Material
- 1 = Carbon Steel
- 3 = Stainless Steel

Spindle and Ball Material
- 1 = Carbon Steel *(ball is chrome plated, spindle is zinc plated)*
- 3 = Stainless Steel

Ball Seal Material
- 1 = Polyacetal *(standard)*
- 3 = PTFE *(1500 psi max)*
- 8 = PEEK

O-Ring Material
- 2 = NBR *(Buna N)*
- 3 = PTFE Spindle Seals and FPM *(fluoroelastomer)* O-Rings *(1500 psi max)*
- 4 = FPM *(Fluoroelastomer) (standard)*
- 5 = EPR

Split Flange Material
- X = Without Split Flanges *(order split flanges separately see page C2-21)*

Handle Codes
- 09X = Without Handle, Sizes 16-50
- 12X = Offset Aluminum, Sizes 16-25
- 16X = Offset Steel, Sizes 32-50
- 18x = Offset Stainless Steel - option for stainless valves size 06-50

Housing Surface Finish
- A = Zinc plated *(standard for all carbon steel valves)*
- *(omit)* = No plating for Stainless Steel

Locking Device Option
- L = Locking Device *(see page A1-22 to order locking device separately)*
- LS = Locking Device with 5 amp Limit Switch, Available for sizes 20-50 *(Not available with PTFE Spindle Seals)*

PN#02080105 / 01.17 / ACC1603-1753

Dimensions

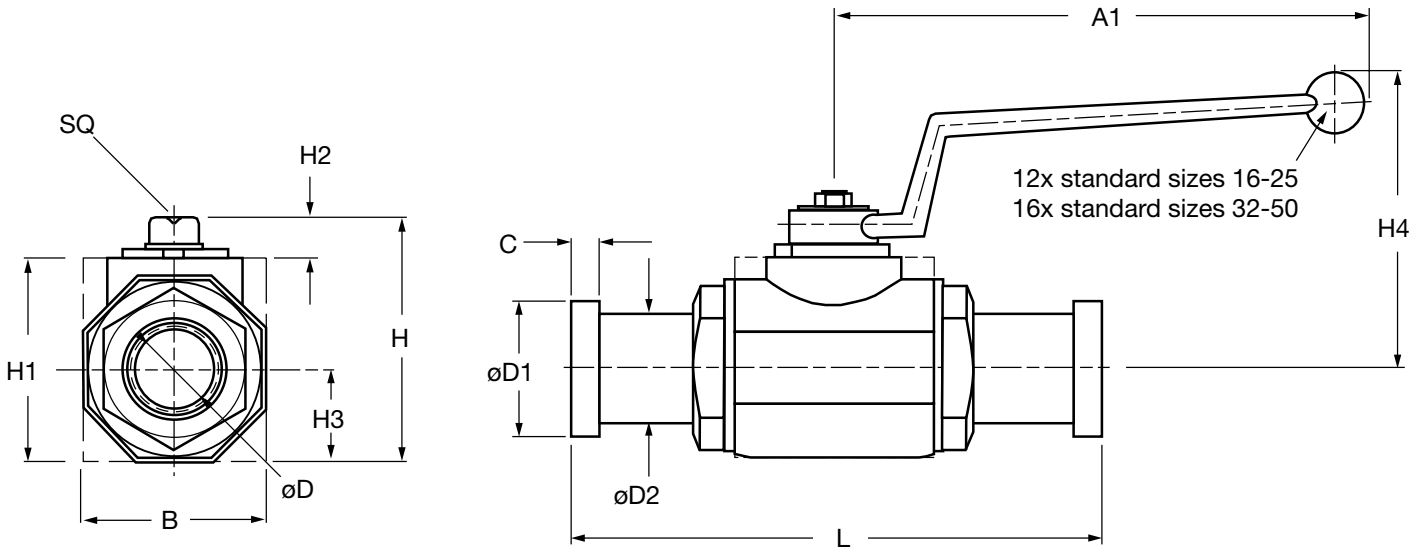

For dimensional information on flanges, C2-21

SAE Code 61 (...F3)

Mw	Max. psi*	Size	A1	B	C	øD	øD1	øD2	H	H1	H2	H3	H4	L	SQ	Wt.
KHB-16 F3	5000	1/2”	6.42 (163)	1.50 (38)	0.27 (6.8)	0.51 (13)	1.19 (30.2)	0.94 (24)	2.44 (62)	1.77 (45)	0.43 (11)	0.75 (19)	3.27 (83)	5.94 (151)	0.47 (12)	2.4 (1.1)
KHB-20 F3	5000	3/4”	7.20 (183)	1.89 (48)	0.27 (6.8)	0.75 (19)	1.50 (38.1)	1.24 (31.5)	2.95 (75)	2.24 (57)	0.43 (11)	0.96 (24.5)	3.62 (92)	6.69 (170)	0.55 (14)	4.0 (1.8)
KHB-25 F3	5000	1”	7.20 (183)	2.24 (57)	0.31 (8)	0.98 (25)	1.75 (44.45)	1.50 (38)	3.23 (82)	2.52 (64)	0.43 (11)	1.12 (28.5)	3.74 (95)	6.95 (176.5)	0.55 (14)	5.1 (2.3)
KHM-32 F3	4000	1-1/4”	12.01 (305)	2.95 (75)	0.31 (8)	1.18 (30)	2.00 (50.8)	1.69 (43)	4.06 (103)	3.35 (85)	0.47 (12)	1.48 (37.5)	5.94 (151)	7.54 (191.4)	0.67 (17)	9.0 (4.1)
KHM-40 F3	3000	1-1/2”	12.01 (305)	3.35 (85)	0.31 (8)	1.50 (38)	2.38 (60.35)	1.97 (50)	4.49 (114)	3.78 (96)	0.47 (12)	1.67 (42.5)	6.18 (157)	9.09 (231)	0.67 (17)	13.1 (5.9)
KHM-50 F3	3000	2”	12.01 (305)	4.13 (105)	0.38 (9.6)	1.89 (48)	2.81 (71.4)	2.44 (62)	5.18 (131.5)	4.43 (112.5)	0.47 (12)	2.07 (52.5)	6.46 (164)	9.21 (234)	0.67 (17)	19.2 (8.7)

SAE Code 62 (...F6)

Model	Max. psi*	Size	A1	B	C	øD	øD1	øD2	H	H1	H2	H3	H4	L	SQ	Wt.
KHB-16 F6	6000 CS 5800 SS	1/2”	6.41 (163)	1.50 (38)	0.31 (7.8)	0.51 (13)	1.25 (31.8)	0.94 (24)	2.44 (62)	1.77 (45)	0.43 (11)	0.75 (19)	3.27 (83)	5.94 (151)	0.47 (12)	2.4 (1.1)
KHB-20 F6	6000 CS 5000 SS	3/4”	7.20 (183)	1.89 (48)	0.35 (8.8)	0.75 (19)	1.63 (41.3)	1.26 (32)	2.95 (75)	2.24 (57)	0.43 (11)	0.96 (24.5)	3.62 (92)	6.69 (170)	0.55 (14)	4.0 (1.8)
KHB-25 F6	6000 CS 5000 SS	1”	7.20 (183)	2.24 (57)	0.37 (9.5)	0.98 (25)	1.87 (47.6)	1.50 (38)	3.23 (82)	2.52 (64)	0.43 (11)	1.12 (28.5)	3.72 (95)	7.81 (198.5)	0.55 (14)	5.4 (2.4)
KHM-32 F6	6000 CS 5000 SS	1-1/4”	12.01 (305)	2.95 (75)	0.41 (10.3)	1.18 (30)	2.13 (54)	1.73 (44)	4.06 (103)	3.35 (85)	0.47 (12)	1.48 (37.5)	5.94 (151)	8.80 (223.4)	0.67 (17)	10.6 (4.8)
KHM-40 F6	6000 CS 5000 SS	1-1/2”	12.01 (305)	3.35 (85)	0.50 (12.6)	1.50 (38)	2.50 (63.5)	2.01 (51)	4.49 (114)	3.78 (96)	0.47 (12)	1.67 (42.5)	6.18 (157)	11.06 (281)	0.67 (17)	15.4 (7.0)
KHM-50 F6	6000 CS 5000 SS	2”	12.01 (305)	4.13 (105)	0.50 (12.6)	1.89 (48)	3.13 (79.4)	2.64 (67)	5.18 (131.5)	4.43 (112.5)	0.47 (12)	2.07 (52.5)	6.46 (164)	12.40 (315)	0.67 (17)	22.5 (10.2)

*Dependent upon valve and seal materials selected.
Notes:
1. Note difference in pressure ratings for Carbon Steel (CS) and Stainless Steel (SS).
2. Dimensions are in inches (mm) and lbs (kg).
3. Dimensions are for general information only, all critical dimensions should be verified by requesting a certified print.

KHF3/6 Series

Direct Mount SAE Flange 1/2” to 2”

Features

- Compact, space saving design
- Full passage for unrestricted flow of medium
- Floating ball provides positive seal
- Valve positioning controlled by a stop pin and limit washer
- Zinc plated Carbon Steel Housing

Specifications

- Connection: Dual bolt pattern fits Code 61 and 62 SAE flanges
- Operating Pressure: to 6000 psi
- Ball Seal Material: Polyacetal
- O-ring Material: Fluoroelastomer *(FPM)*
- Housing Material: Carbon Steel
- Temperature Range: 14˚ to 176˚F

Dimensions

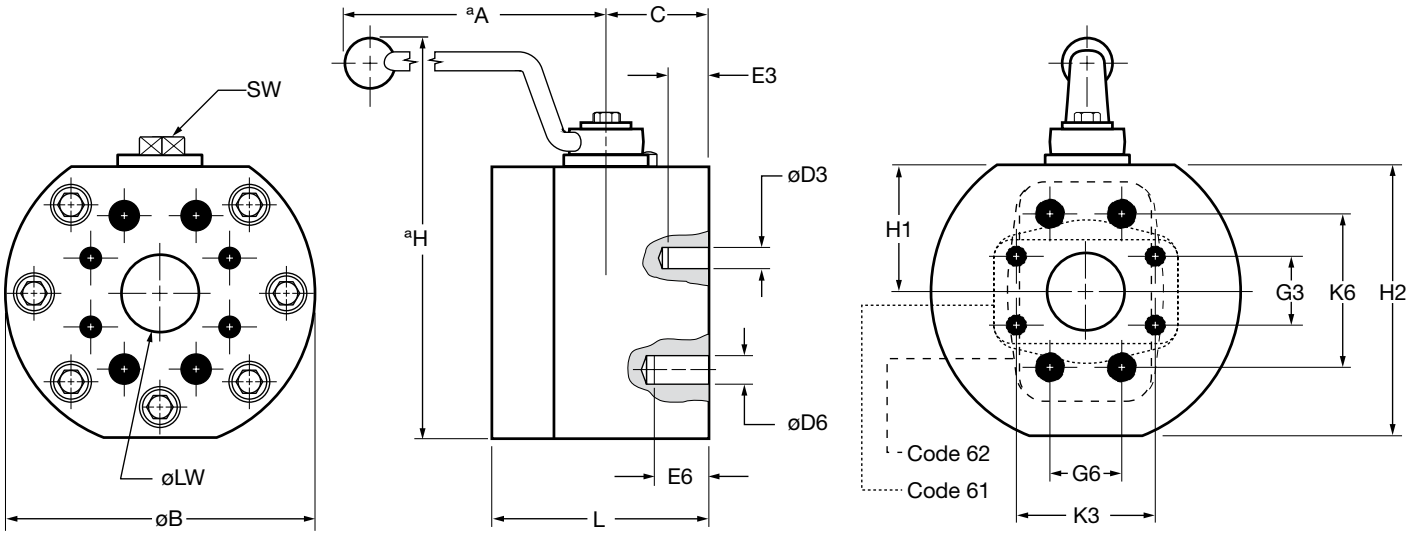

Size	Model Code	Code 61					Code 62				
		K3	G3	øD3	E3	MAWP (psi)*	K6	G6	øD6	E6	MAWP (psi)*
1/2”	KHF3/6-16-1114-16X-A-UNC	1.50	0.69	5/16”-18UNC	0.63	5000	1.59	0.72	5/16”-18UNC	0.63	6000
3/4”	KHF3/6-20-1114-16X-A-UNC	1.87	0.88	3/8”-16UNC	0.71	5000	2.00	0.94	3/8”-16UNC	0.71	6000
1”	KHF3/6-25-1114-16X-A-UNC	2.06	1.03	3/8”-16UNC	0.71	5000	2.25	1.09	7/16”-14UNC	0.83	6000
1 1/4”	KHF3/6-32-1114-36X-A-UNC	2.31	1.19	7/16”-14UNC	0.71	4000	2.62	1.25	1/2”-13UNC	0.83	6000
1 1/2”	KHF3/6-40-1114-36X-A-UNC	2.75	1.41	1/2”-13UNC	1.02	3000	3.12	1.44	5/8”-11UNC	1.02	6000
2”	KHF3/6-50-1114-36X-A-UNC	3.06	1.69	1/2”-13UNC	1.02	3000	3.87	1.75	3/4”-10UNC	1.18	6000

Size	Model Code	øB	H1	H2	øLW	L	H	C	SW (mm)	A	Weight
1/2”	KHF3/6-16-1114-16X-A-UNC	3.11	1.34	2.81	0.51	2.95	5.08	1.28	12	7.00	5.5
3/4”	KHF3/6-20-1114-16X-A-UNC	3.90	1.73	3.54	0.75	3.15	5.79	1.35	14	7.00	8.6
1”	KHF3/6-25-1114-16X-A-UNC	4.69	1.85	4.02	0.98	3.46	6.30	1.50	14	7.00	13.2
1 1/4”	KHF3/6-32-1114-36X-A-UNC	5.47	2.32	4.88	1.18	3.94	8.31	1.73	17	12.0	25.6
1 1/2”	KHF3/6-40-1114-36X-A-UNC	6.30	2.56	5.51	1.50	4.33	8.94	2.01	17	12.0	36.2
2”	KHF3/6-50-1114-36X-A-UNC	7.05	2.86	6.17	1.89	4.57	9.61	2.13	17	12.0	54.9

*Pressure rating listed is valve pressure only. Pressure ratings for available flanges may be less. Consult flange manufacturer and ISO 6162 for flange pressure rating.
Notes:
1. Dimensions are in inches and lbs.
2. Dimensions are for general information only, all critical dimensions should be verified by requesting a certified print.

PN#02080105 / 01.17 / ACC1603-1753

KHF3 Series

Direct Mount SAE Flange 2 1/2” to 4”

Features

- Compact, space saving design
- Full passage for unrestricted flow of medium
- Floating ball provides positive seal
- Zinc plated Carbon Steel Housing
- Individually tested for leakage free performance

Specifications

- Connection: Bolt pattern fits code 61 SAE flanges
- Operating Pressure: to 2500 psi
- Ball Seal Material: Polyacetal
- O-ring Material: Fluoroelastomer *(FPM)*
- Housing Material: Carbon Steel
- Temperature Range: 14˚ to 176˚F

Dimensions

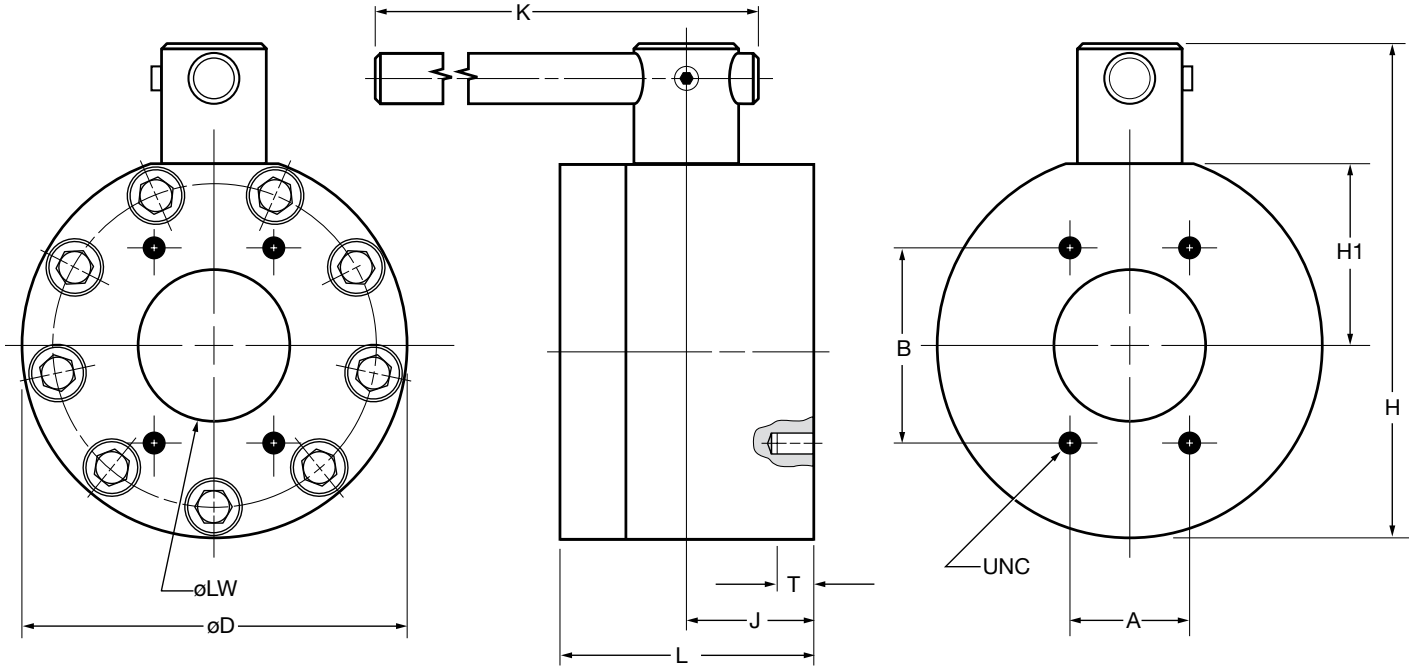

Size	Model Code	øLW	L	J	H1	H	øD	A	B	UNC	T	K	MAWP (psi)*	Weight
2 1/2”	KHF3-065-1114-05X-A-UNC	2.48	5.90	2.95	3.70	10.8	7.80	2.00	3.50	1/2”-13UNC	0.75	36	2500	73
3”	KHF3-080-1114-05X-A-UNC	2.99	5.51	2.76	4.09	11.4	8.27	2.44	4.19	5/8”-11UNC	0.95	36	2000	88
4”	KHF3-100-1114-05X-A-UNC	3.94	6.69	3.35	4.80	13.1	10.16	3.06	5.13	5/8”-11UNC	0.95	36	500	132

*Pressure rating listed is valve pressure only. Pressure ratings for available flanges may be less.
Consult flange manufacturer and ISO 6162 for flange pressure rating.
Notes:
1. Dimensions are in inches and lbs.
2. Dimensions are for general information only, all critical dimensions should be verified by requesting a certified print.

KHP Series

2-way Manifold Mounted Ball Valves

Specifications

- Sizes 3/8” - 2”
- Carbon Steel Housing
- Ball Seals: Polyacetal *(standard)*
- O-Rings: Fluoroelastomer *(FPM) (standard)*
- Operating Pressure: to 5000 psi depending on seal materials selected
- Temperature Range: 14˚ to 176˚F with standard materials *(1114)* up to maximum pressure rating. Extended temperature range -40˚ to 392˚F on request with special materials and reduced pressure rating *(see page A1-3)*.

Model Code

KHP - 20 - 1 1 1 4 - 12X - A - L

Housing Type
KHP = Block Housing for Manifold mounting

Nominal Sizes

Valve Size	Nominal Size
10	3/8”
16	1/2”
20	3/4”
25	1”
32	1-1/4”
40	1-1/2”
50	2”

Body Material
1 = Carbon Steel

Spindle and Ball Material
1 = Carbon Steel *(ball is chrome plated, spindle is zinc plated)*
3 = Stainless Steel

Ball Seal Material
1 = Polyacetal *(standard)*
3 = PTFE *(1500 psi max)*

O-Ring Material
2 = NBR *(Buna N)*
3 = PTFE Spindle Seals and FPM *(fluoroelastomer)* O-Rings *(1500 psi max)*
4 = FPM *(fluoroelastomer) (standard)*
5 = EPR

Handle Codes
09x = Without Handle
12x = Offset Aluminum sizes 10 - 25
16x = Offset Steel sizes 32 - 50

Housing Surface Finish
A = Zinc plated *(standard for all carbon steel valves)*

Locking Device Option
L = Locking Device *(see page A1-22 to order locking device separately)*
LS = Locking Device with 5 amp Limit Switch *(Sizes 20, 25 only) (Not available with PTFE Spindle Seals)*

PN#02080105 / 01.17 / ACC1603-1753

Dimensions

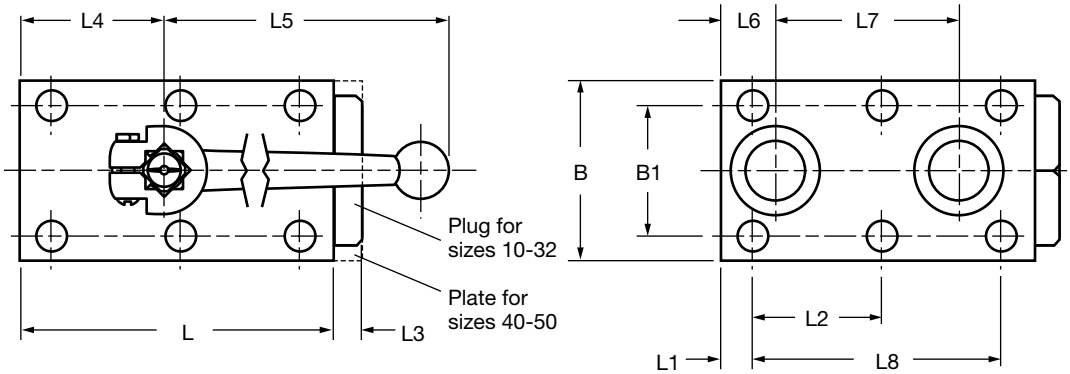

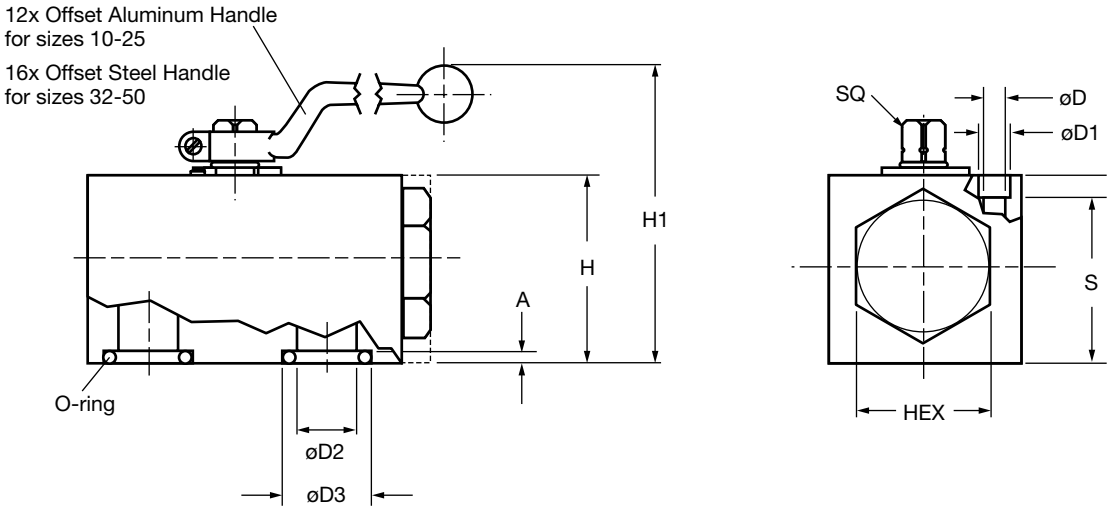

Model	Max. psi*	A	B	B1	ø D	ø D1	ø D2	ø D3	HEX	H	H1	O-ring	Weight
KHP-10	5000	0.08 (2)	2.17 (55)	1.575 (40)	0.35 (9)	0.55 (14)	0.374 (9.5)	0.591 (15)	1 3/16 (30)	1.77 (45)	3.58 (91)	10x2.6	2.6 (1.2)
KHP-16	5000	0.08 (2)	2.36 (60)	1.772 (45)	0.35 (9)	0.55 (14)	0.630 (16)	0.984 (25)	1 7/16 (36)	2.17 (55)	4.45 (113)	20.3x2.6	4.6 (2.1)
KHP-20	5000	0.12 (3)	2.76 (70)	2.008 (51)	0.41 (10.5)	0.65 (16.5)	0.787 (20)	1.181 (30)	1 5/8 (41)	2.76 (70)	5.16 (131)	23.4x3.5	8.2 (3.7)
KHP-25	5000	0.12 (3)	3.15 (80)	2.362 (60)	0.41 (10.5)	0.65 (17)	0.925 (23.5)	1.378 (35)	2 (50)	3.15 (80)	5.55 (141)	28.2x3.5	12.3 (5.6)
KHP-32	5000	0.12 (3)	3.94 (100)	3.071 (78)	0.51 (13)	0.75 (19)	1.260 (32)	1.551 (39.4)	2 9/16 (65)	3.94 (100)	8.07 (205)	32.9x3.5	23.4 (10.6)
KHP-40	5000	0.12 (3)	5.12 (130)	3.740 (95)	0.69 (17.5)	1.02 (26)	1.496 (38)	1.906 (48.4)	–	3.94 (100)	8.07 (205)	42x3.5	38.6 (17.5)
KHP-50	5000	0.12 (3)	5.91 (150)	4.409 (112)	0.87 (22)	1.30 (33)	1.89 (48)	2.181 (55.4)	–	4.33 (110)	8.46 (215)	49x3.5	43.7 (19.8)

Model	L	L1	L2	L3	L4	L5	L6	L7	L8	S	SQ	Bolt Size**	Torque**
KHP-10	2.76 (70)	0.295 (7.5)	1.083 (27.5)	0.39 (10)	1.14 (29)	5.51 (140)	0.394 (10)	1.732 (44)	2.165 (55)	1.42 (36)	0.35 (9)	5/16” - 18 UNC x 2”	26 ft/lb
KHP-16	3.94 (100)	0.335 (8.5)	1.634 (41.5)	0.39 (10)	1.73 (44)	6.42 (163)	0.669 (17)	2.284 (58)	3.268 (83)	1.81 (46)	0.47 (12)	5/16” - 18 UNC x 2 1/4”	26 ft/lb
KHP-20	4.61 (117)	0.394 (10)	1.909 (48.5)	0.39 (10)	2.01 (51)	7.20 (183)	0.787 (20)	2.717 (69)	3.819 (97)	2.34 (59.5)	0.55 (14)	3/8” - 16 UNC x 3”	45 ft/lb
KHP-25	5.32 (135)	0.394 (10)	2.264 (57.5)	0.39 (10)	2.44 (62)	7.20 (183)	0.945 (24)	3.189 (81)	4.528 (115)	2.72 (69)	0.55 (14)	3/8” - 16 UNC x 3 1/4”	45 ft/lb
KHP-32	6.50 (165)	0.472 (12)	2.677 (68)	0.43 (11)	2.95 (75)	12.00 (305)	1.142 (29)	3.780 (96)	5.354 (136)	3.31 (84)	0.67 (17)	7/16” - 14 UNC x 4”	75 ft/lb
KHP-40	7.09 (180)	1.122 (28.5)	2.205 (56)	0.98 (25)	3.33 (84.6)	12.00 (305)	1.122 (28.5)	4.409 (112)	4.409 (112)	3.25 (82.5)	0.67 (17)	5/8” - 11 UNC x 4 1/4”	220 ft/lb
KHP-50	8.66 (220)	1.496 (38)	2.677 (68)	0.98 (25)	4.17 (106)	12.00 (305)	1.496 (38)	5.354 (136)	5.354 (136)	3.48 (88.5)	0.67 (17)	3/4” - 10 UNC x 4 1/2”	400 ft/lb

*Dependent upon valve and seal materials selected.
**Bolt size and torque provided as reference only. Manifold designs must take all factors (materials, pressure, etc.) into consideration. Consult HYDAC Engineering for more information.

Notes:
1. Dimensions are in inches (mm) and lbs (kg)
2. Dimensions are for general information only, all critical dimensions should be verified by requesting a certified print.

KHB3H Series

3 Piece Ball Valve

Specifications

- 1/2” - 4” Standard Port
- 1/2” - 2” Class 2500 ANSI *(up to 6000 psi)*
  3” - 4” Class 1500 ANSI *(up to 3800 psi)*
- Blow-out proof stem
- Handle operated or actuated
- Applications: Offshore, Oil & Gas, Chemical, Petrochemical, Refining, Energy
- Media: Liquid or gas
- Material: Stainless Steel
- End Connections: Socket weld and threaded.
  Other options available *(consult factory)*
- Locking devices available

Model Code

KHB3H - SP - 1 SW - 3 3 8 2

Series Type
KHB3H = High Pressure 3 Piece Ball Valve

Port
SP = Standard Port

Connection Size *(inches)*
1/2”, 3/4”, 1”, 1 1/4”, 1 1/2”, 2”, 2 1/2”, 3”, 4”

Connection Type
SW = Socket Weld
NPT = Tapered Pipe Threads

Body Material
3 = Stainless Steel

Spindle & Ball Material
3 = Stainless Steel

Ball Seal Material
8 = PEEK

Body Seal Material
2 = NBR *Buna (standard)*
4 = FPM *(Fluoroelastomer)*

PN#02080105 / 01.17 / ACC1603-1753

Parts & Materials

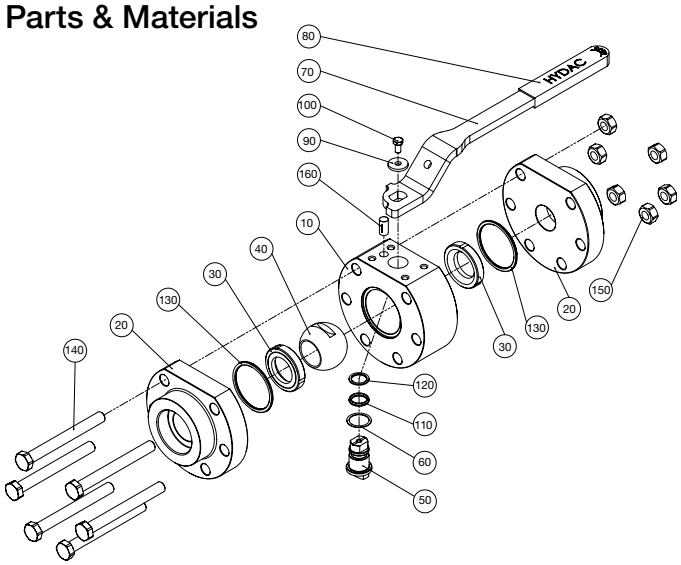

Item	Designation	Material
10	Housing	Stainless steel A479 316/316L
20	Connection adapter	Stainless steel A479 316/316L
30	Sealing cup	PEEK
40	Ball	Stainless steel 1.4404, 1.4408
50	Spindle	Stainless steel 1.4462
60	Thrust washer	PEEK
70	Handle	Stainless steel 1.4301
80	Protective cap	PVC
90	Washer	Stainless steel A2
100	Screw	Stainless steel A2
110	O-ring	NBR or FPM
120	Back-up ring	PTFE
130	O-ring	NBR or FPM
140	Screw	Stainless steel A4
150	Nut	Stainless steel A4
160	Stop pin	Stainless steel A4

Dimensions
Size 1/2” - 2”

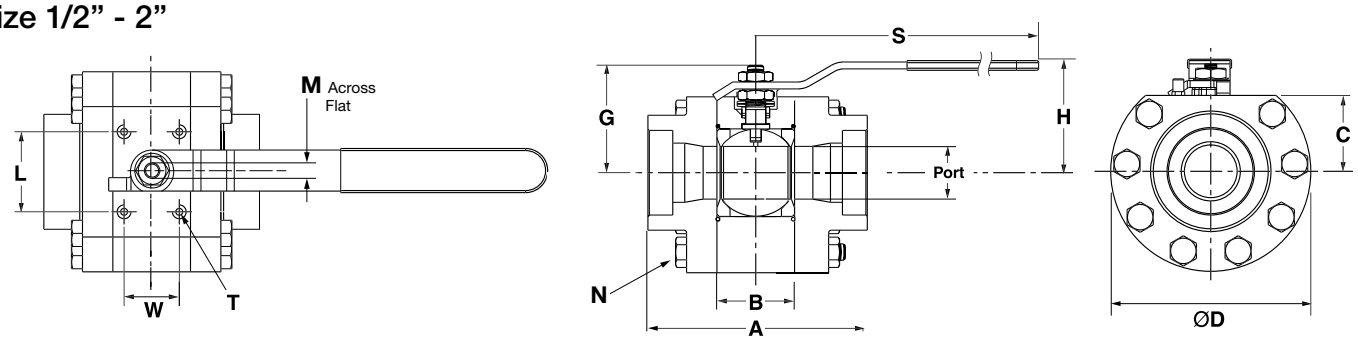

Size 3” - 4”

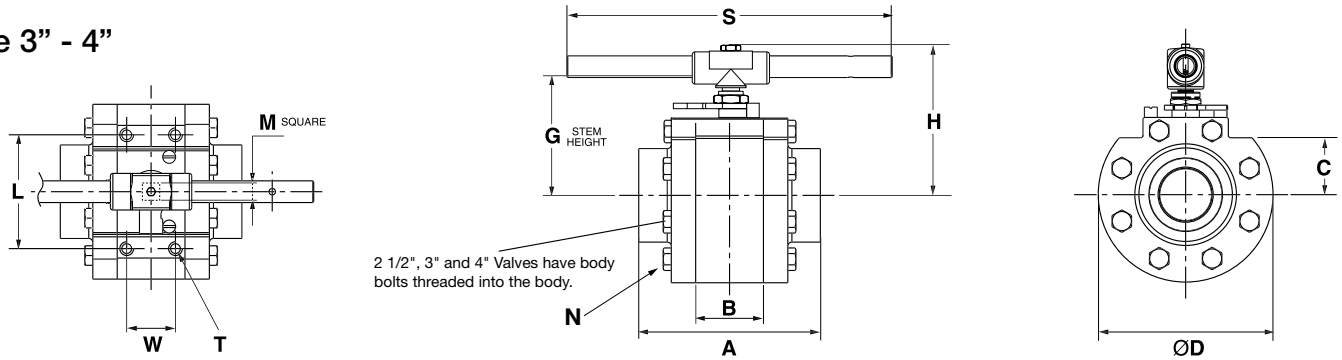

Size	Port	A	B	C	G	ØD	H	M	N	S	T	W	L	Weight (kg)
1/2”	0.47 (12)	3.07 (78)	0.98 (25)	1.06 (27)	1.30 (33)	2.76 (70)	2.40 (61)	0.35 (9)	6 qty. M8x55	7.20 (183)	M5	0.59 (15)	1.34 (34)	3.7 (1.7)
3/4”	0.59 (15)	3.35 (85)	1.10 (28)	1.30 (33)	1.54 (39)	3.11 (79)	2.64 (67)	0.35 (9)	6 qty. M8x65	7.20 (183)	M5	0.59 (15)	1.34 (34)	6.6 (3.0)
1”	0.79 (20)	4.25 (108)	1.50 (38)	1.65 (42)	1.97 (50)	3.86 (98)	3.23 (82)	0.47 (12)	6 qty. M10x90	10.39 (264)	M6	0.94 (24)	1.65 (42)	11.2 (5.1)
1 1/4”	0.98 (25)	4.76 (121)	1.69 (43)	1.77 (45)	2.09 (53)	4.29 (109)	3.35 (85)	0.47 (12)	6 qty. M10x95	10.39 (264)	M6	0.94 (24)	1.65 (42)	14.3 (6.5)
1 1/2”	1.18 (30)	5.16 (131)	2.05 (52)	2.28 (58)	2.60 (66)	5.04 (128)	3.82 (97)	0.67 (17)	8 qty. M12x110	14.92 (379)	M8	1.42 (36)	1.57 (40)	23.1 (10.5)
2”	1.50 (38)	5.63 (143)	2.13 (54)	2.52 (64)	2.83 (72)	5.71 (145)	4.09 (104)	0.67 (17)	8 qty. M12x110	14.92 (379)	M8	1.57 (40)	2.28 (58)	31.0 (14.1)
2 1/2”	1.89 (48)	6.81 (173)	2.72 (69)	3.03 (77)	3.62 (92)	6.46 (164)	5.35 (136)	0.67 (17)	16 qty. M16x45	19.69 (500)	M8	4 x ø1.73 (ø44)		48.2 (21.9)
3”	2.48 (63)	8.82 (224)	3.78 (96)	4.06 (103)	5.20 (132)	8.58 (218)	7.36 (187)	1.06 (27)	16 qty. M20x60	35.43 (900)	M10	1.97 (50)	1.38 (35)	109.8 (49.9)
4”	2.99 (76)	10.55 (268)	4.41 (112)	4.45 (113)	5.59 (142)	9.41 (239)	7.76 (197)	1.06 (27)	16 qty. M20x60	35.43 (900)	M10	1.97 (50)	1.38 (35)	150.0 (68.2)

Notes:
1. Dimensions are in inches (mm) and lbs (kg).
2. Dimensions are for general information only, all critical dimensions should be verified by requesting a certified print.

KHB3K Series

3-way Diverter Ball Valves

Specifications

- 1/4" - 1" Full Port Design
- 2 Position
- Carbon Steel Housing
- NPT or SAE O-Ring Connections
- Ball Seals: Polyacetal *(standard)*
- O-Rings: Fluoroelastomer *(FPM) (standard)*
- Operating Pressure: to 7250 psi depending on valve size and seal materials selected
- Temperature Range: 14˚ to 176˚F with standard materials *(1114)* up to maximum pressure rating. Extended temperature range -40˚ to 392˚F on request with special materials and reduced pressure rating *(see page A1-3)*.

Model Code

KHB3K - 16 NPT - L - 1 1 1 4 - 11X - A - L

Housing Type
KHB3K = Three-Way Diverter Ball Valve

Nominal Sizes

Nom Size	SAE Tube	SAE Thread	NPT Pipe Size	NPT Pipe OD
06	-4	7/16-20 UNF	1/4"	0.540"
10	-6	9/16-18 UNF	3/8"	0.675"
16	-8	3/4-16 UNF	1/2"	0.840"
20	-12	1-1/16-12 UN	3/4"	1.050"
25	-16	1-5/16-12 UN	1"	1.315"
32	-20	1-5/8-12 UN	1-1/4"	1.660"
40	-24	1-7/8-12 UN	1-1/2"	1.900"
50	-32	2-1/2-12 UN	2"	2.375"

Connection Type
NPT = ANSI/ASME 1.20.1 Taper Pipe Thread
SAE = SAEJ1926 Ports with ISO 725 Threads and O-Ring Sealing

Ball Drilling
L = standard

Body Material
1 = Carbon Steel *(phosphate coated)*

Spindle and Ball Material
1 = Carbon Steel *(ball is chrome plated, spindle is zinc plated)*
3 = Stainless Steel

Ball Seal Material
1 = Polyacetal *(standard)*
3 = PTFE *(1500 psi max)*

O-Ring Material
2 = NBR *(Buna N)*
3 = PTFE Spindle Seals and FPM *(Fluoroelastomer)* O-Rings *(1500 psi max)*
4 = FPM *(Fluoroelastomer) (standard)*

Handle Codes
09x = Without Handle
11x = Straight Aluminum, Sizes 06-25
16x = Offset Steel Handle, Sizes 32-50

Housing Surface Finish
A = Zinc plated *(standard for all carbon steel valves)*
(omit) = No plating for Stainless Steel

Locking Device Option
L = Locking Device *(see page A1-22 to order locking device separately)*
LS = Locking Device with 5 amp Limit Switch, Available for Sizes 20-50 *(Not available with PTFE Spindle Seals)*

PN#02080105 / 01.17 / ACC1603-1753

Dimensions

Sizes 06 - 25

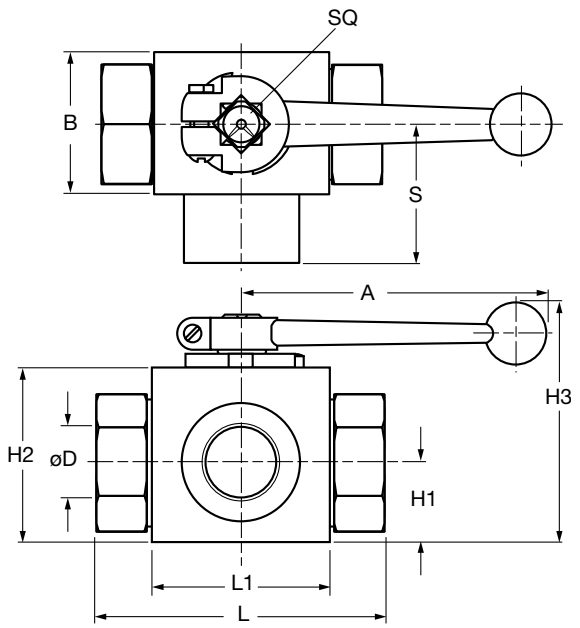

Sizes 32 - 50

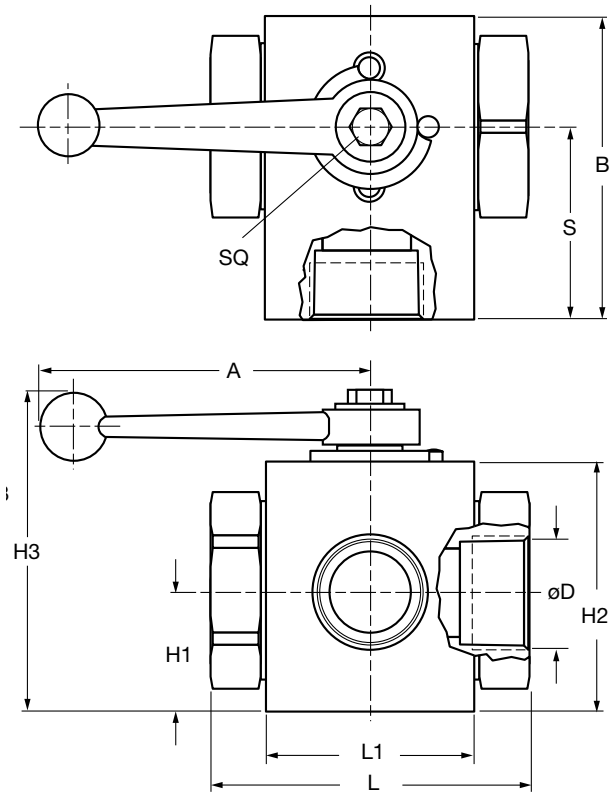

Ball Drilling

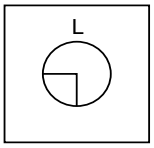

Function Diagrams

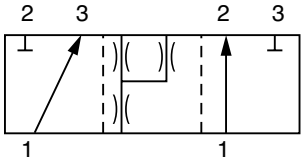

Notes: Pressure port 1 should always be the highest pressure port

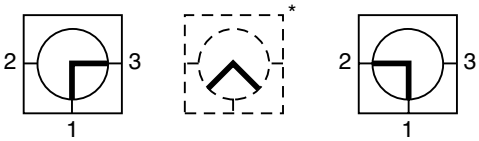

At intermediate position flow will not be completely shut off.
Notes: Valve is not designed to be used as a flow control valve. Valve should not be left in an intermediate position to avoid seal damage.

Model	Port Threads	Max. psi*	A	B	øD	H1	H2	H3	L	L1	SQ	S	Weight
KHB3K-06SAE...	7/16”-20 UNF	7250	5.90 (150)	1.02 (26)	0.24 (6)	0.51 (13)	1.26 (32)	1.65 (42)	2.72 (69)	1.46 (37)	0.35 (9)	1.36 (34.5)	0.88 (0.4)
KHB3K-06NPT...	1/4” NPT												
KHB3K-10SAE...	9/16”-18 UNF	7250	5.90 (150)	1.26 (32)	0.39 (10)	0.67 (17)	1.57 (40)	1.69 (47)	2.83 (72)	1.65 (42)	0.35 (9)	1.42 (36)	1.32 (0.6)
KHB3K-10NPT...	3/8” NPT												
KHB3K-16SAE...	3/4”-16 UNF	5800	6.89 (175)	1.50 (38)	0.63 (16)	0.75 (19)	1.77 (45)	2.01 (51)	3.27 (83)	1.85 (47)	0.47 (12)	1.64 (41.5)	1.76 (0.8)
KHB3K-16NPT...	1/2” NPT												
KHB3K-20SAE...	1-1/16”-12 UN	5000	7.87 (200)	1.93 (49)	0.79 (20)	1.08 (27.5)	2.36 (60)	2.28 (58)	3.74 (95)	2.36 (60)	0.55 (14)	1.87 (47.5)	3.31 (1.5)
KHB3K-20NPT...	3/4” NPT												
KHB3K-25SAE...	1-5/16”-12 UN	5000	7.87 (200)	2.28 (58)	0.98 (25)	1.16 (29.5)	2.56 (65)	2.40 (61)	4.45 (113)	2.56 (65)	0.55 (14)	2.22 (56.5)	4.85 (2.2)
KHB3K-25NPT...	1” NPT												
KHB3K-32SAE...	1-5/8”-12 UNF	5000	9.00 (228)	4.35 (110.5)	1.18 (30)	1.70 (43.3)	3.54 (90.0)	5.47 (139)	4.53 (115)	2.99 (76)	0.67 (17)	2.76 (70)	7.7 (3.5)
KHB3K-32NPT...	1-1/4” NPT												
KHB3K-40SAE...	1-7/8”-12 UN	5000	9.00 (228)	4.69 (119)	1.38 (35)	1.71 (43.5)	3.79 (96.2)	5.71 (145)	5.31 (135)	3.35 (85)	0.67 (17)	2.95 (75)	11 (5)
KHB3K-40NPT...	1-1/2” NPT												
KHB3K-50SAE...	2-1/2”-12 UN	5000	9.00 (228)	5.73 (145.5)	1.73 (44)	2.35 (59.8)	4.72 (120)	6.02 (153)	5.91 (150)	4.72 (120)	0.67 (17)	3.35 (85)	16.5 (7.5)
KHB3K-50NPT...	2” NPT												

*Dependent upon valve and seal materials selected.
Notes:
1. Dimensions are in inches (mm) and lbs (kg)
2. Dimensions are for general information only, all critical dimensions should be verified by requesting a certified print.

KH3 & KH4 Series

Multiway Ball Valves

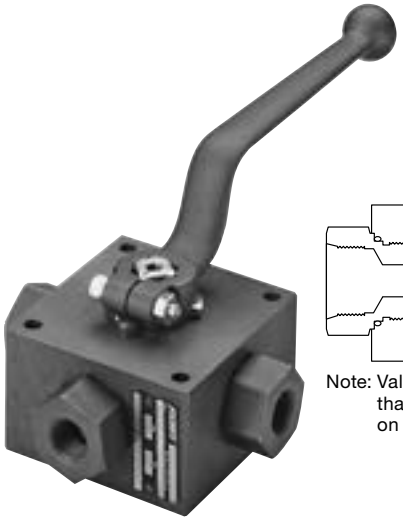

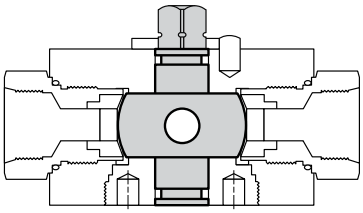

Note: Valves use a trunion design, rather than the "floating ball" design used on all other ball valves.

Specifications

- Sizes 1/4" to 3/4"
- 2 Positions, 90˚ Switching Standard
- Carbon Steel Housing
- L and T Ball Drilling: KH3
- L, T and X Ball Drilling: KH4
- NPT or SAE O-Ring Connections
- Ball Seals: Polyacetal *(standard)*
- O-Rings: Fluoroelastomer *(FPM) (standard)*
- Operating Pressure: to 7250 psi depending on valve size and seal materials selected
- Temperature Range: 14˚ to 176˚F with standard materials *(1114)* up to maximum pressure rating. Extended temperature range -40˚ to 392˚F on request with special materials and reduced pressure rating *(see page A1-3)*.

Model Code

KH3 - 12 NPT - L - 1 1 1 4 - 12X - A - L

Housing Type
- KH3 = Three-Way
- KH4 = Four-Way

Nominal Sizes

Nom Size	SAE Tube	Thread	NPT Pipe Size	Pipe OD
06	-4	7/16-20 UNF	1/4"	0.540"
10	-6	9/16-18 UNF	3/8"	0.675"
12	-8	3/4-16 UNF	1/2"	0.840"
20	-12	1-1/16-12 UN	3/4"	1.050"

Connection Type
- NPT = ANSI/ASME 1.20.1 Taper Pipe Thread
- SAE = SAEJ1926 Ports with ISO 725 Threads and O-Ring Sealing

Ball Drilling
- L = standard for KH3
- T = *(optional)*
- X = standard for KH4

Body Material
- 1 = Carbon Steel

Spindle and Ball Material
- 1 = Carbon Steel *(ball is chrome plated, spindle is zinc plated)*
- 3 = Stainless Steel

Ball Seal Material
- 1 = Polyacetal *(standard)*
- 3 = PTFE *(1500 psi max)*

O-Ring Material
- 2 = NBR *(Buna N)*
- 4 = FPM *(Fluoroelastomer) (standard)*

Handle Codes
- 09x = Without Handle
- 12x = Offset Aluminum *(standard)*

Housing Surface Finish
- A = Zinc plated *(standard for all carbon steel valves)*

Locking Device Option
- L = Locking Device *(see page A1-22 to order locking device separately)*

PN#02080105 / 01.17 / ACC1603-1753

Dimensions

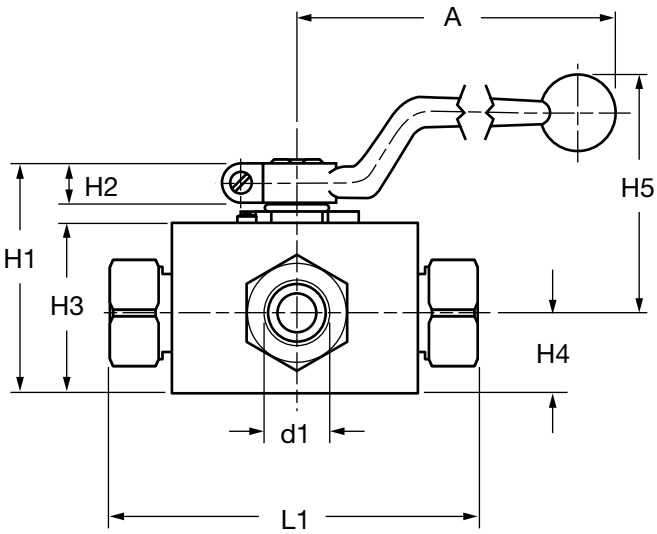

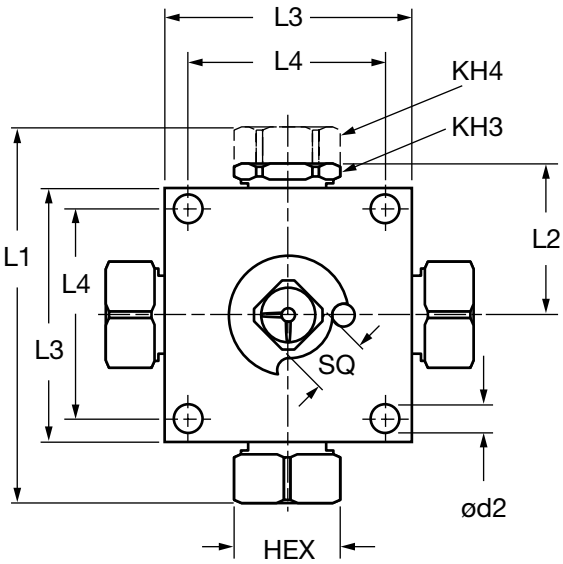

Handle Not Shown

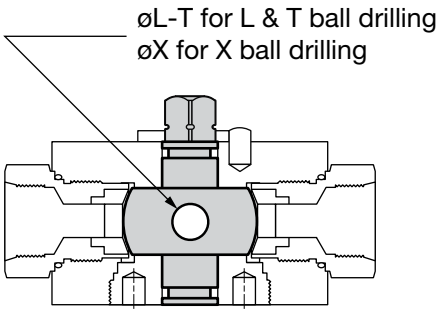

Ball Drilling

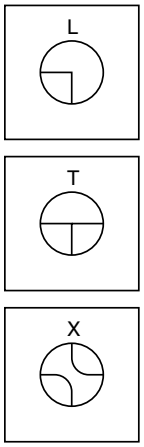

Function Diagrams

3-Way Ball Valve L-Bore

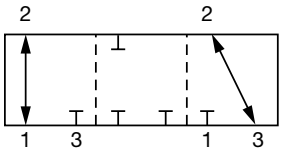

90° Switch

4-Way Ball Valve X-Bore

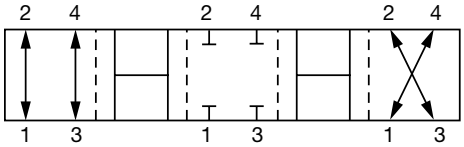

90° Switch

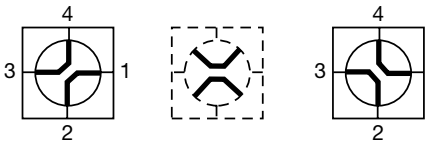

Notes: These are positive overlap valves. At approximately 45° rotation, flow will be blocked to all ports.
For "T" function diagram, contact HYDAC.

Model	d1	Max. psi*	A	L1	L2	L3	L4	H1	H2	H3	H4	H5	ød2	SQ	HEX	øL-T	øX	Wt.
KH...06SAE KH...06NPT	7/16"-20 UNF 1/4" NPT	7250	6.42 (163)	3.94 (100)	1.67 (42.5)	2.76 (70)	2.17 (55)	2.28 (58)	0.51 (13)	1.57 (40)	0.87 (22)	2.48 (63)	0.26 (6.5)	0.47 (12)	0.95 (24)	0.20 (5)	0.18 (4.5)	3.5 (1.6)
KH...10SAE KH...10NPT	9/16"-18 UNF 3/8" NPT	7250	7.20 (183)	4.53 (115)	1.81 (46)	3.15 (80)	2.56 (65)	2.72 (69)	0.55 (14)	1.97 (50)	1.06 (27)	2.95 (75)	0.26 (6.5)	0.55 (14)	1.18 (30)	0.35 (9)	0.24 (6)	5.3 (2.4)
KH...12SAE KH...12NPT	3/4"-16 UNF 1/2" NPT	5800	7.20 (183)	5.32 (135)	2.20 (56)	3.94 (100)	3.15 (80)	3.11 (79)	0.55 (14)	2.36 (60)	1.22 (31)	3.46 (88)	0.35 (9)	0.55 (14)	1.42 (36)	0.47 (12)	0.39 (10)	9.5 (4.3)
KH...20SAE KH...20NPT	1 1/16"-12 UN 3/4" NPT	4500	8.94 (227)	5.67 (144)	2.26 (57.5)	3.94 (100)	3.35 (85)	3.68 (93.5)	0.61 (15.5)	2.87 (73)	1.42 (36)	3.82 (97)	0.35 (9)	0.67 (17)	1.81 (46)	0.71 (18)	0.55 (14)	13.2 (6.0)

*Dependent upon valve and seal materials selected.
Notes:
1. Dimensions are in inches (mm) and lbs (kg)
2. Dimensions are for general information only, all critical dimensions should be verified by requesting a certified print.

Ball Valve Actuator

Pneumatic Operation

Model Code

KHB-25SAE-1114 - A 5 1 A A

Ball Valve
Available for both KHB & KHM Series
(See pages A1-4 thru A1-18 for details on ball valve model codes)
Note: OMIT the Handle code rather than entering the code for no handle.

Actuator Type
A = Pneumatic - single (FSA) or double acting (FDA)

Size*
2 = 25 *(recommended for valves KHB-06... - KHB-20)*
3 = 40
4 = 65
5 = 100 *(recommended for valves KHB-25... & KHM-32)*
6 = 200
7 = 350 *(recommended for valves KHM-40... & KHM-50)*

Operation
1 = All Double acting *(air to A to open, air to B to close)*
2 = #2 Spring Set *(balances with 40 psi)*
3 = #3 Spring Set *(balances with 60 psi)*
4 = #4 Spring Set *(balances with 80 psi)*
5 = #5 Spring Set *(balances with 100 psi)*
6 = #6 Spring Set *(balances with 120 psi)*
Single acting, spring return *(air to A to open, spring to close)*

Limit Switches
A = none
B = Standard Limit Switch Module *(2 SPDT)*

Additional Options
A = none
B = Control Valve: 120V AC
C = Control Valve: 24V DC

Description

The HYDAC dependable rack and pinion pneumatic actuators are compact and efficient components with a trouble-free, high-cycle service life.

The double piston design allows significantly reduced cylinder diameter and overall size as compared to single piston design.

Each piston has a gear rack that applies an equal force at two points directly across the diameter of a common pinion gear.

This feature, combined with the patented suspension system, creates a symmetrically balanced, center-mount actuator with a short, powerful stroke, rapid response, and fully concentric operating loads for optimum life expectancy and performance in control valve applications.

Features

- Reliable rack and pinion design
- High output torque and compactness
- Integrated air manifold and internal porting
- A solenoid valve can be mounted directly onto actuator body thus external piping is simplified
- Double-acting and single-acting (spring return) models are available
- Self-lubricating bands reduce friction and smooth piston travel, and increase efficiency
- Limit switch available

Ordering

Pneumatic Actuators (double acting) & Mounting Kits

Valve Size	Actuator Model Code	Actuator Part Number	Mounting Kit Part Number
KHB-06 (1/4”)	FDA-25	2700205	2201839
KHB-10 (3/8”)	FDA-25	2700205	2201839
KHB-16 (1/2”)	FDA-25	2700205	2061509
KHB-20 (3/4”)	FDA-25	2700205	2061510
KHB-25 (1”)	FDA-100	2700206	2061511
KHM-32 (1 1/4”)	FDA-100	2700206	2061512
KHM-40 (1 1/2”)	FDA-350	2700207	2061513
KHM-50 (2”)	FDA-350	2700207	2061513

Optional Accessories (model code / part number)

Limit Switch Box *(2 SPDT switches)*		
ACTUATOR LIMIT SWITCH		02700282
Limit Switch Mounting Kit *(for FDA-25 thru FDA-350)*		
ACTUATOR LIMIT SWITCH MTG KIT		02700284
Solenoid Control Valve** (120 VAC)	3-Way *(for FSA)*	02082888
	4-Way *(for FDA)*	02082890
Solenoid Control Valve** (24 VDC)	3-Way *(for FSA)*	02082887
	4-Way *(for FDA)*	02082889

*Recommendations for actuator size are based on a typical application: Double acting actuator, 3000 psi max. pressure, mineral based hydraulic fluid, 80-100 psi shop air, and a moderate duty cycle. Applications with Spring Return actuators, higher system pressures, low lubricity fluids, or infrequent cycling (< once/hr.) may require a larger size actuator. Please consult HYDAC Engineering Department for assistance sizing actuators for these applications.
**See pages A3-10 to A3-11 for information on Solenoid Valves.

Dimensions

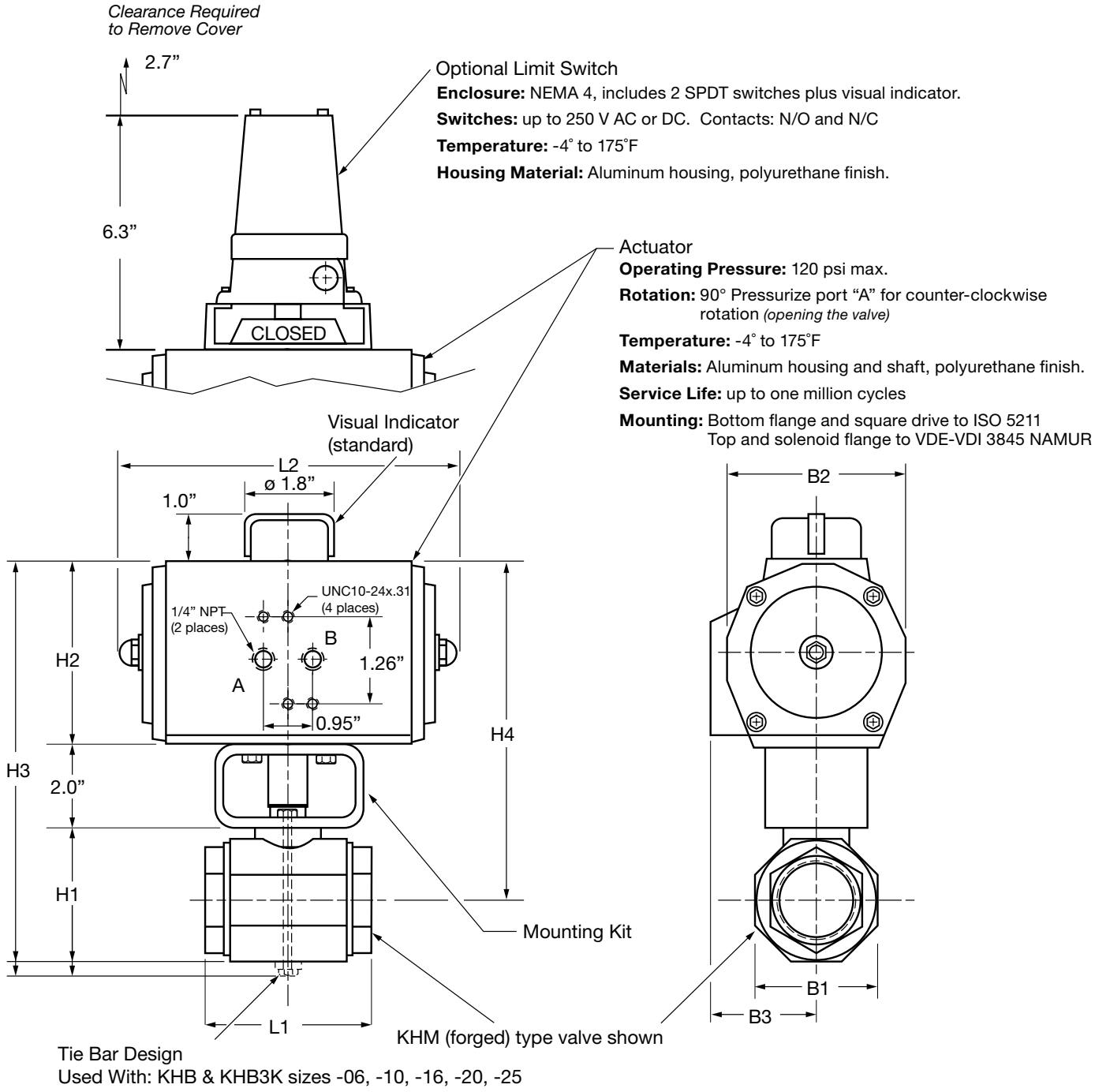

Ball Valve / Actuator Size	H1	H2	H3	H4	L1	L2	B1	B2	B3	Operating Time (sec)	Air Cons. (in3/1atm)	Weight
KHB-06 / EDA-12	2.2	2.4	6.6	5.3	2.8	4.1	1.0	2.4	1.9	0.4	4	3.5
KHB-10 / EDA-12	2.2	2.4	6.6	5.3	2.9	4.1	1.3	2.4	1.9	0.4	4	4
KHB-16 / EDA-25	2.5	3.2	7.7	6.2	3.3	6.3	1.5	2.9	1.8	0.5	7	6.5
KHB-20 / EDA-25	3.2	3.2	8.4	6.5	3.8	6.3	1.9	2.9	1.8	0.5	7	8
KHB-25 / EDA-100	3.5	4.7	10.2	8.1	4.5	8.7	2.3	4.3	2.5	1.2	30	14
KHM-32 / EDA-100	3.4	4.7	10.1	8.6	4.4	8.7	3.0	4.3	2.5	1.2	30	16
KHM-40 / EDA-350	3.8	7.1	12.9	11.2	5.2	12.0	3.4	6.8	3.7	3.6	120	37
KHM-50 / EDA-350	4.5	7.1	13.6	11.5	5.6	12.0	4.2	6.8	3.7	3.6	120	42

Notes:
1. Dimensions are in inches and lbs.
2. Dimensions are for general information only, all critical dimensions should be verified by requesting a certified print.

Ball Valve Locking Devices

Description

In situations where the opening or closing of a ball valve can cause severe damage or personal injury, HYDAC recommends the installation of a locking device. Locking devices are available for our entire range of high pressure ball valves. Two different styles are available to accommodate the different valve body styles. All HYDAC high pressure ball valves can be ordered with a locking device. Locking devices can also be ordered separately using the chart below.

Material note: All lock plates and lock bars are made of Zinc plated Steel.

Operation

KHM...
(forged valve bodies)

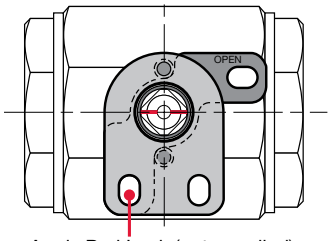

Apply Pad Lock (not supplied) here to lock in OPEN Postition

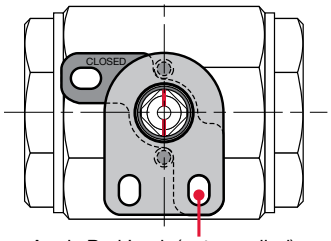

Apply Pad Lock (not supplied) here to lock in CLOSED Postition

KHB..., KHP..., KH3..., KH4..., KHB3K...
(block valve bodies)

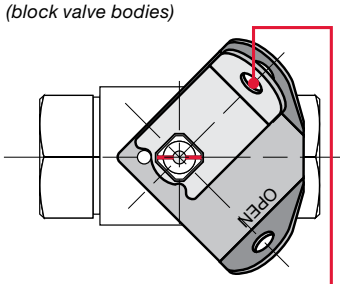

Apply Pad Lock (not supplied) here to lock in OPEN Postition

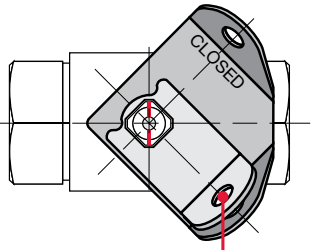

Apply Pad Lock (not supplied) here to lock in CLOSED Postition

Installation

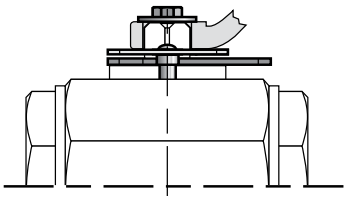

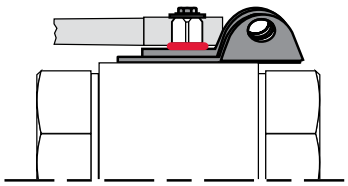

Ordering

To order a ball valve with a locking device, simply add "-L" to the end of the model code. See the model code page for that particular valve to create a complete code. To order a locking device separately, use the chart below.

Size	KHB	KHM	KHP	KH3 & KH4	KHB3K
6	02061169	02061169	N/A	02061172	02061175
10	02061169	02061169	02061169	02061173	02061175
12	N/A	N/A	N/A	02061173	N/A
16	02061170	02061170	02061170	N/A	02061176
20	02061171	02061171	02061171	02061174	02061177
25	02061171	02061171	02061171	N/A	02061177
32	N/A	02055711	02063434	N/A	N/A
40	N/A	02055711	02063434	N/A	N/A
50	N/A	02055711	02063434	N/A	N/A

Ball Valve Locking Devices with Limit Switches

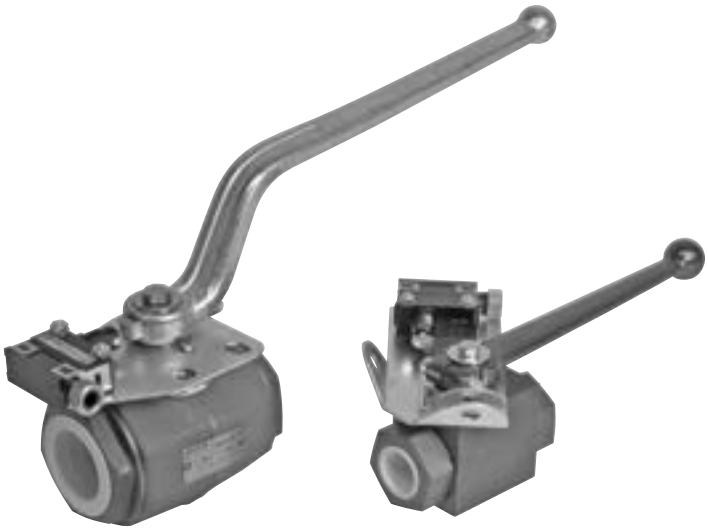

Description:

When remote indication of the valve position is required, a limit switch can be added to the valve assembly.

- A reliable single pole, double throw (SPDT) switch to indicate either open or closed position of a two-way valve
- Hermetically sealed
- Can be wired as Normally Open (N/O), or Normally Closed (N/C)
- Available for HYDAC valve sizes 20 through 50
- Mounting brackets serve as locking devices

Ordering:
To order a valve with limit switch, add **"-LS"** to the end of the valve **Model Code**, i.e.: KHM-32NPT-1114-16X-LS

Operation

KHB..., KHP..., KH3..., KH4..., KHB3K... *(block valve bodies, sizes 20 & 25)*

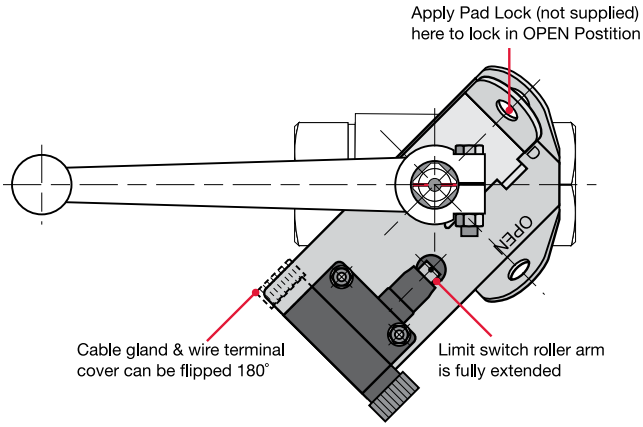

Valve Retrofit kit
Part #: 02067694

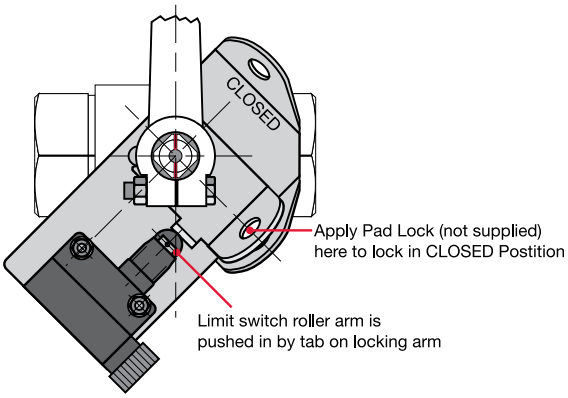

KHM... *(forged valve bodies, sizes 32 through 50)*

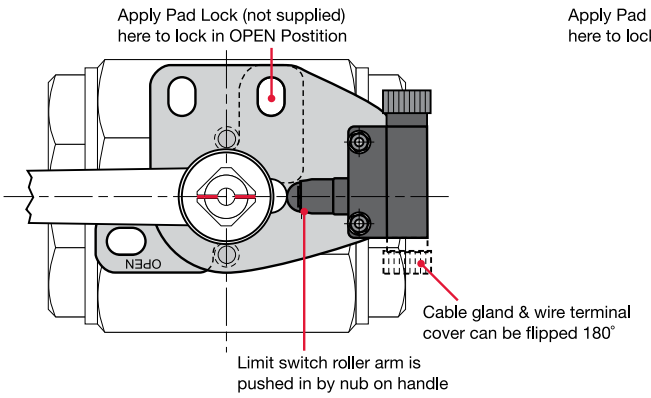

Valve Retrofit kit
Part #: 02063537

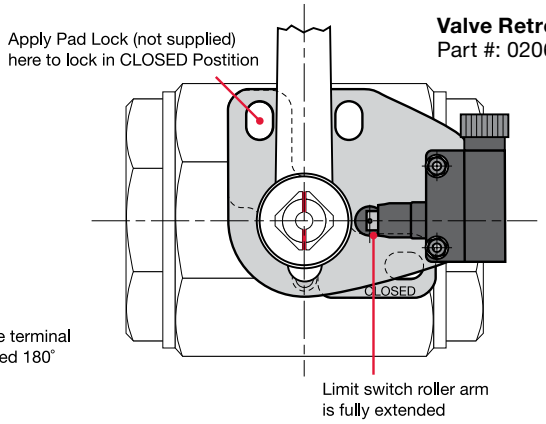

Wiring Details

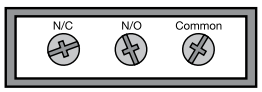

M3 Terminal Screws

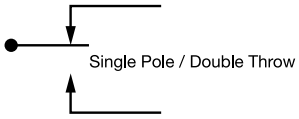

Electrical Specifications

- NEMA 3, 4, 13 and IEC IP 67
- 5A- up to 250 VAC, 30 VDC
- Temperature range: 14 to 158˚F
- UL listed

Replacement Switch
Part #: 02700009

Seal Kits

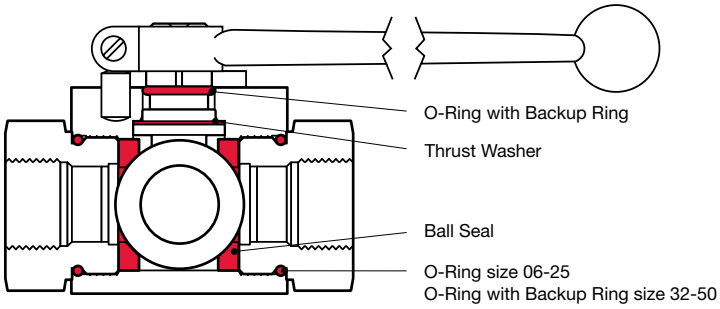

Model Code	Part Number
SEAL KIT KHB-06NPT/SAE-XX14	02061479
SEAL KIT KHB-10NPT/SAE-XX14	02061467
SEAL KIT KHB-16F3/F6-XX14	02061469
SEAL KIT KHB-16NPT/SAE-XX14	02061468
SEAL KIT KHB-20F3/F6-XX14	02061471
SEAL KIT KHB-20NPT/SAE-XX14	02061470
SEAL KIT KHB-25F3/F6-XX14	02061473
SEAL KIT KHB-25NPT/SAE-XX14	02061472
SEAL KIT KHM-32F3/F6-XX14	02061481
SEAL KIT KHM-32NPT/SAE-XX14	02061480
SEAL KIT KHM-40F3/F6-XX14	02061483
SEAL KIT KHM-40NPT/SAE-XX14	02061482
SEAL KIT KHM-50F3/F6-XX14	02061485
SEAL KIT KHM-50NPT/SAE-XX14	02061484
SEAL KIT KHP-06-XX14	00554029
SEAL KIT KHP-10-XX14	02061486
SEAL KIT KHP-16-XX14	02061487
SEAL KIT KHP-20-XX14	02061507
SEAL KIT KHP-25-XX14	02061488
SEAL KIT KHP-32-XX14	02061489
SEAL KIT KHP-40-XX14	02061505
SEAL KIT KHP-50-XX14	02061506

Model Code

SEAL KIT KHB - 06 NPT/SAE - XX14

Seal Kit

Valve Body Type
- KHB = Block Housing
- KHM = Forged Housing
- KH3/4 = 3-Way & 4-Way Valves
- KHP = Manifold Mount

Valve Size
- 06, 10, 16, 20, 25, 32, 40,50

Connection Type
- *(omit)* = Manifold Mount *(KHP)*
- NPT/SAE = NPT or SAE
- F3/F6 = F3 or F6 Split Flange

Materials

Body Material
- X = Body material does not affect seal kits

Spindle and Ball Material
- X = Spindle and ball material does not affect seal kits

Ball Seal Material
- 1 = Polyacetal *(standard)*
- 3 = PTFE
- 8 = PEEK

O-Ring Material
- 2 = NBR *(Buna N)*
- 3 = PTFE Spindle Seals and FPM *(Fluoroelastomer)*

O-Rings
- 4 = FPM *(Fluoroelastomer) (standard)*
- 5 = EPDM

Complete maintenance instructions are available on our web site: http://www.hydac-na.com/sites/hydac-na/Downloads/Manuals/Accessories

www.HYDAC-NA.com

Handles

DN Sizes	Description Designation	Model Code	Spindle Square Size	Model Code	Part Number
06, 10	Straight Aluminum	11X	SW09	HANDLE STR AL SW09	00270099
06, 10	Offset Aluminum	12X	SW09	HANDLE OFS AL SW09	00271423
06, 10	Offset Steel	16X	SW09	HANDLE KIT OFS STL SW09	02064265*
16	Straight Aluminum	11X	SW12	HANDLE STR AL SW12	00270100
16	Offset Aluminum	12X	SW12	HANDLE OFS AL SW12	00270381
16	Offset Steel	16X	SW12	HANDLE KIT OFS STL SW12	02064266*
20, 25	Straight Aluminum	11X	SW14	HANDLE STR AL SW14	00270101
20, 25	Offset Aluminum	12X	SW14	HANDLE OFS AL SW14	00270382
20, 25	Offset Steel	16X	SW14	HANDLE KIT OFS STL SW14	02064267*
32, 40, 50	Offset Steel	16X	SW17	HANDLE KIT OFS STL SW17 16X	02064268*
32, 40, 50	Offset Aluminum	12X	SW17	HANDLE OFS AL SW17	00270383
32, 40, 50	Straight Aluminum	11X	SW17	HANDLE STR AL SW17	00270311
	No Handle	09X			
	Loose Handle	0XX			

*These handles require the additional mounting hardware which is included

A2

Low Pressure Ball Valves

HYDAC's line of low pressure ball valves complements our high pressure offering. Trust HYDAC for all of your manual isolation requirements.

KHR Series

2-way Ball Valves with SAE & G Connections (Low Pressure)

Specifications

- 1/2” - 2” Full Port Design
- SAE O-ring Connections
- Ball Seals: Polyaceal *(standard)*
- O-rings: NBR *(Buna) (standard)*
- Aluminum Housing
- Operating Pressure: up to 400 psi *(30 bar)*
- Temperature Range: -10°C to 80°C with standard materials *(4112)*

Model Code

KHR - 25 SAE - 4 1 1 2 - 16X - SO760 E 1 000

Housing Type
KHR

Nominal Sizes

Nom Size	Tube Size	SAE Thread Size	G Thread Size
16	-8	3/4-16 UNF	G 1/2”
20	-12	1-1/16-12 UN	G 3/4”
25	-16	1-5/16-12 UN	G 1”
32	-20	1-5/8-12 UN	G 1 1/4”
40	-24	1-7/8-12 UN	G 1 1/2”
50	-32	2-1/2-12 UN	G 2”

Connection Type
SAE = SAEJ1926 Ports with ISO 725 Threads and O-Ring Sealing
G = Whitworth Internal Thread to ISO 228

Body Material
4 = Aluminum

Spindle and Ball Material
1 = Carbon Steel *(ball is chrome plated, spindle is zinc plated)*
2 = Stainless Steel

Ball Seal Material
1 = Polyacetal *(standard)*
3 = PTFE

O-Ring Material
2 = NBR *(Buna) (standard)*
4 = FPM *(fluoroelastomer)*

Handle Codes
09x = No Handle
12x = Offset Aluminum
16x = Offset Steel

Locking Device Option
SO760 = Locking Device *(padlock not included)*

Limit Switch Option
E = Limit switch (position switch)

Monitored switching position
1 = Monitoring of valve - open position
2 = Monitoring of valve - closed position
3 = Monitoring of valve - open & closed position

Limit switch code
000 = Includes Limit switch to DIN EN 50041 – Type A
100 = Prepared for Limit switch to DIN EN 50041 – Type A *(switches not included)*

PN#02080105 / 01.17 / ACC1603-1753

KHR Limit Switches Options

Examples of different models

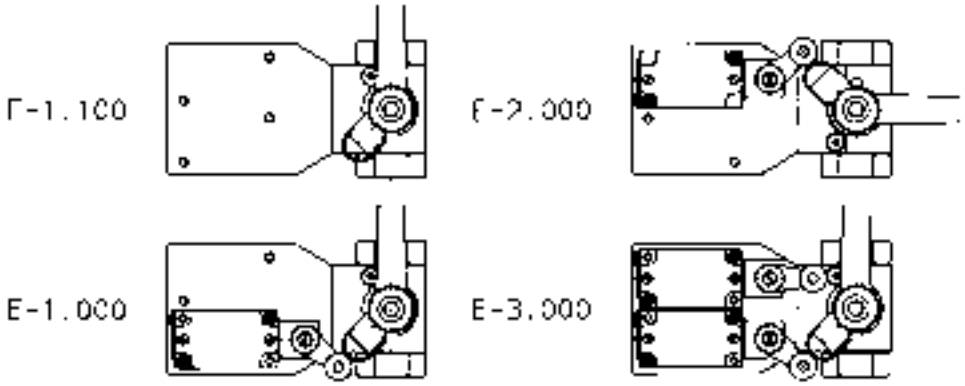

Limit Switch Specifications

- Position switch: to DIN EN 50041 Form A, metal enclosure with roller lever
- Standard Switch Kit Contains 1 N/C contact or 1 N/O contact
- Protection class: IP 67
- Insulation group: 500 V AC
- Continuous current: 10 A
- Nominal voltage: 300 V AC
- Mechanical service life: 30 x 10^6 switching cycles
- Switching frequency: 6 x 10^3 switching cycles/hour
- Permitted ambient temperature: -40 to +85°C

Dimensions

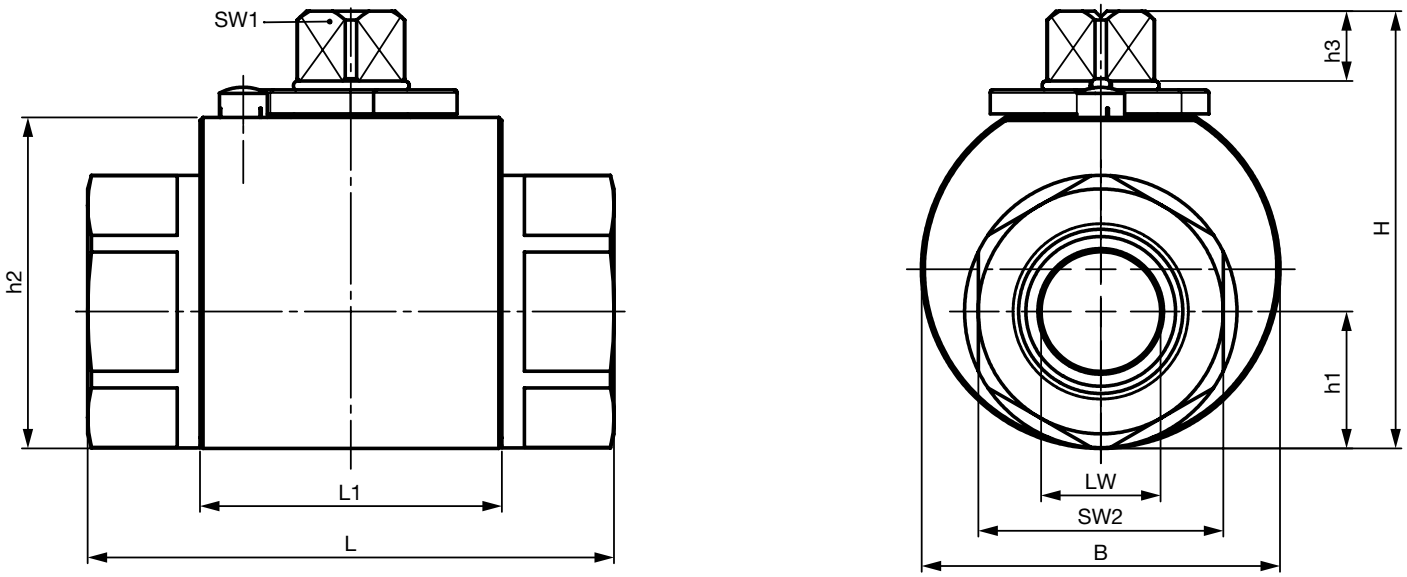

Connection Type	Type	DN	LW	d1	i	L	L1	B	H	h1	h2	h3	SW1	SW2	Weight	PN [bar]
DIN ISO 228	KHR-G1/2	0.629 (16)	0.629 (16)	G1/2	0.629 (16)	3.070 (78)	1.653 (42)	1.968 (50)	2.429 (61.7)	0.728 (18.5)	1.751 (44.5)	0.433 (11)	0.472 (12)	1.259 (32)	0.793 (0.36)	435 (30)
Female pipe thread	KHR-G3/4	0.787 (20)	0.787 (20)	G3/4	0,708 (18)	3.645 (92.6)	1.988 (50.5)	2.362 (60)	2.881 (73.2)	0.921 (22.9)	2.181 (55.4)	0.456 (11.6)	0.551 (14)	1.614 (41)	1.46 (0.66)	435 (30)
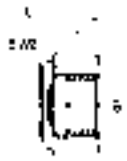	KHR-G1	0.984 (25)	0.984 (25)	G1	0.807 (20.5)	4.043 (102.7	2.145 (54.5)	2.755 (70)	3.153 (80.1)	1.062 (27)	2.460 (62.5)	0.456 (11.6)	0.551 (14)	1.811 (46)	1.98 (0.90)	435 (30)
	KHR-G11/4	1.259 (32)	1.259 (32)	G11/4	0.866 (22)	4.015 (102)	2.519 (64)	3.346 (85)	3.862 (98.1)	1.295 (32.9)	3.133 (79.6)	0.472 (12)	0.669 (17)	2.165 (55)	3.24 (1.47)	435 (30)
	KHR-G11/2	1.574 (40)	1.496 (38)	G11/2	0.944 (24)	4.330 (110)	2.874 (73)	3.740 (95)	4.318 (109.7	1.515 (38.5)	3.590 (91.2)	0.472 (12)	0.669 (17)	2.599 (65)	4.52 (2.05)	435 (30)
	KHR-G2	1.968 (50)	1.880 (48)	G2	1.102 (28)	5.157 (131)	2.913 (74)	4.527 (115)	5.027 (127.7	1.929 (49)	4.299 (109.2	0.472 (12)	0.669 (17)	3.346 (85)	7.52 (3.41)	435 (30)
	KHR-G21/2	2.559 (65)	2.559 (65)	G21/2	1.377 (35)	7.204 (183)	4.921 (125)	5.472 (139)	6.023 (153)	2.5 (63.5)	5.295 (134.5	0.472 (12)	0.669 (17)	3.937 (100)	13.9 (6.31)	247 (17)
	KHR-G3	3.149 (80)	3.149 (80)	G3	1.377 (35)	7.480 (190)	4.724 (120)	6.259 (159)	6.870 (174.5	2.972 (75.5)	6.141 (156)	0.472 (12)	0.669 (17)	4.724 (120)	21.4 (9.69)	247 (17)
	KHR-G4	3.937 (100)	3.937 (100)	G4	1.574 (40)	9.055 (230)	5.905 (150)	7.401 (188)	8.051 (204.5	3.562 (90.5)	7.322 (186)	0.472 (12)	0.669 (17)	5.511 (140)	33.4 (15.14	247 (17)

Dimensions are in inches/(mm), lbs. (kg.) and psi (bar) and are for general information only, all critical dimensions should be verified by requesting a certified print.
Notes: 1. Dependent upon valve and seal materials selected.
2. Bolt size and torque provided as reference only. Manifold designs must take all factors (materials, pressure, etc.) into consideration.

Consult HYDAC Engineering for more information.

(continued on next page)

Dimensions *(continued)*

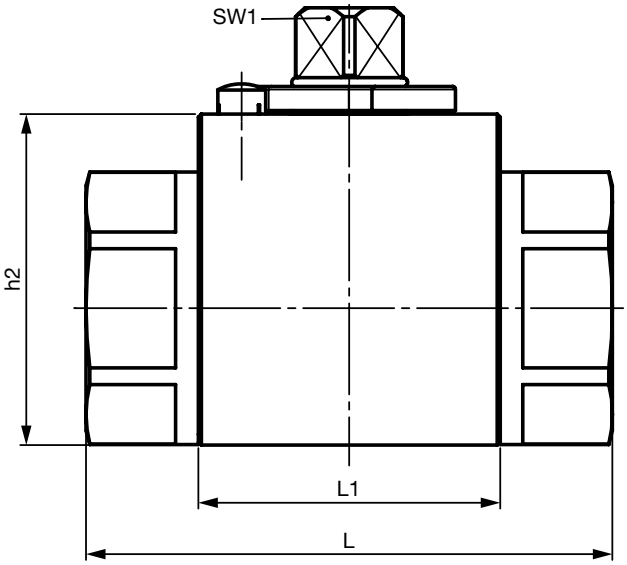

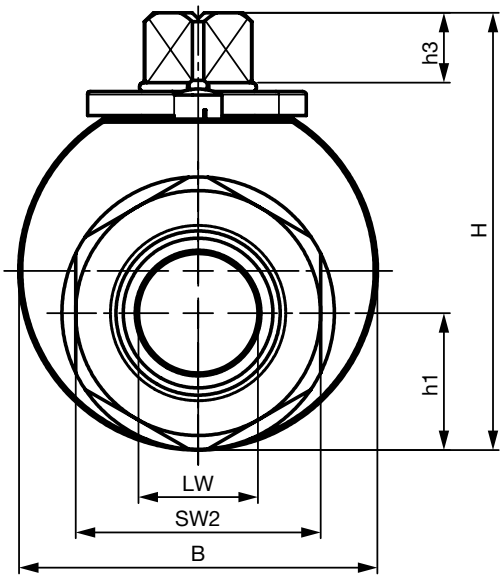

Connection Type	Type	DN	LW	d1	i	L	L1	B	H	h1	h2	h3	SW1	SW2	Weight	PN
SAE J 514 UN/UNF	KHR-16SAE	0.629 (16)	0.629 (16)	3/4 -16 UNF	0.590 (15)	2.677 (68)	1.653 (42)	1.968 (50)	2.429 (61.7)	0.728 (18.5)	1.751 (44.5)	0.433 (11)	0.472 (12)	1.259 (32)	1.17 (0.53)	435 (30)
Female thread	KHR-20SAE	0.787 (20)	0.787 (20)	1 1/16 - 12 UN	0,787 (20)	3.468 (88.1)	1.988 (50.5)	2.362 (60)	2.881 (73.2)	0.921 (22.9)	2.181 (55.4)	0.456 (11.6)	0.551 (14)	1.614 (41)	1.3 (0.58)	435 (30)
	KHR-25SAE	0.984 (25)	0.984 (25)	1 5/16 -12 UN	0.787 (20)	3.649 (92.7)	2.145 (54.5)	2.755 (70)	3.153 (80.1)	1.062 (27)	2.460 (62.5)	0.456 (11.6)	0.551 (14)	1.811 (46)	1.7 (0.77)	435 (30)
	KHR-32SAE	1.259 (32)	1.259 (32)	1 5/8 -12 UN	0.787 (20)	4.014 (102)	2.519 (64)	3.346 (85)	3.862 (98.1)	1.295 (32.9)	3.133 (79.6)	0.472 (12)	0.669 (17)	2.165 (55)	2.99 (1.36)	435 (30)
	KHR-40SAE	1.574 (40)	1.496 (38)	1 7/8 - 12 UN	0.787 (20)	4.330 (110)	2.874 (73)	3.740 (95)	4.318 (109.7	1.515 (38.5)	3.590 (91.2)	0.472 (12)	0.669 (17)	2.599 (65)	4.17 (1.89)	435 (30)
	KHR-50SAE	1.968 (50)	1.880 (48)	2 1/2 - 12 UN	0.787 (20)	4.921 (125)	2.913 (74)	4.527 (115)	5.027 (127.7	1.929 (49)	4.299 (109.2	0.472 (12)	0.669 (17)	3.346 (85)	7.4 (3.36)	435 (30)
	KHR-65SAE	2.559 (65)	2.559 (65)	3 - 12 UN	1.003 (25.5)	7.204 (183)	4.921 (125)	5.472 (139)	6.023 (153)	2.5 (63.5)	5.295 (134.5	0.472 (12)	0.669 (17)	3.937 (100)	14.7 (6.65)	435 (30)
	KHR-80SAE	3.149 (80)	3.149 (80)	3 1/2 - 12UN	1.003 (25.5)	7.480 (190)	4.724 (120)	6.259 (159)	6.870 (174.5	2.972 (75.5)	6.141 (156)	0.472 (12)	0.669 (17)	4.724 (120)	20.7 (9.41)	247 (17)
	KHR-100SAE	3.937 (100)	3.937 (100)	4 1/2 - 12 UN	1.574 (40)	9.055 (230)	5.905 (150)	7.401 (188)	8.051 (204.5	3.562 (90.5)	7.322 (186)	0.472 (12)	0.669 (17)	5.511 (140)	34.5 (15.64)	247 (17)

Connection Type	Type	DN	LW	d1	i	L	L1	B	H	h1	h2	h3	SW1	SW2	Weight	PN
ANSI B1.20.1	KHR-16NPT	0.629 (16)	0.629 (16)	1/2 - 14 NPT	0.533 (13.56)	2.677 (68)	1.653 (42)	1.968 (50)	2.429 (61.7)	0.728 (18.5)	1.751 (44.5)	0.433 (11)	0.472 (12)	1.259 (32)	1.15 (0.52)	435 (30)
NPT female thread	KHR-20NPT	0.787 (20)	0.787 (20)	3/4 -14 NPT	0.545 (13.86)	3.468 (88.1)	1.988 (50.5)	2.362 (60)	2.881 (73.2)	0.921 (22.9)	2.181 (55.4)	0.456 (11.6)	0.551 (14)	1.614 (41)	1.2 (0.56)	435 (30)
	KHR-25NPT	0.984 (25)	0.984 (25)	1 - 11 1/2 NPT	0.682 (17.34)	3.649 (92.7)	2.145 (54.5)	2.755 (70)	3.153 (80.1)	1.062 (27)	2.460 (62.5)	0.456 (11.6)	0.551 (14)	1.811 (46)	1 6 (0.75)	435 (30)
	KHR-32NPT	1.259 (32)	1.259 (32)	1 1/4 - 11 1/2 NPT	0.706 (17.95)	4.014 (102)	2.519 (64)	3.346 (85)	3.862 (98.1)	1.295 (32.9)	3.133 (79.6)	0.472 (12)	0.669 (17)	2.165 (55)	2.9 (1.35)	435 (30)
	KHR-40NPT	1.574 (40)	1.496 (38)	1 1/2 -11 1/2 NPT	0.723 (18.38)	4.330 (110)	2.874 (73)	3.740 (95)	4.318 (109.7)	1.515 (38.5)	3.590 (91.2)	0.472 (12)	0.669 (17)	2.599 (65)	4.08 (1.85)	435 (30)
	KHR-50NPT	1.968 (50)	1.880 (48)	2 - 11 1/2 NPT	0.756 (19.22)	4.921 (125)	2.913 (74)	4.527 (115)	5.027 (127.7	1.929 (49)	4.299 (109.2	0.472 (12)	0.669 (17)	3.346 (85)	7.34 (3.33)	435 (30)
	KHR-65NPT	2.559 (65)	2.559 (65)	2 1/2 - 8 NPT	1.137 (28.9)	7.204 (183)	4.921 (125)	5.472 (139)	6.023 (153)	2.5 (63.5)	5.295 (134.5)	0.472 (12)	0.669 (17)	3.937 (100)	14.15 (6.42)	247 (17)
	KHR-80NPT	3.149 (80)	3.149 (80)	3 - 8 NPT	1.2 (30.48)	7.480 (190)	4.724 (120)	6.259 (159)	6.870 (174.5)	2.972 (75.5)	6.141 (156)	0.472 (12)	0.669 (17)	4.724 (120)	21/6 (9.78)	247 (17)
	KHR-100NPT	3.937 (100)	3.937 (100)	4 - 8 NPT	1.3 (33.02)	9.055 (230)	5.905 (150)	7.401 (188)	8.051 (204.5)	3.562 (90.5)	7.322 (186)	0.472 (12)	0.669 (17)	5.511 (140)	33.8 (15.32)	247 (17)

Dimensions are in inches/(mm), lbs. (kg.) and psi (bar) and are for general information only, all critical dimensions should be verified by requesting a certified print.
Notes: 1. Dependent upon valve and seal materials selected.
2. Bolt size and torque provided as reference only. Manifold designs must take all factors (materials, pressure, etc.) into consideration.

Consult HYDAC Engineering for more information.

KHNVL Series

Brass Ball Valve

Description

The KHNVL Series ball valves are full port, brass, NPT threaded manual ball valves.

Features

- Full port ball drilling for unrestricted flow
- Cast 2-piece brass body
- Compact assembly
- Anti-blow out stem
- Locking device available upon request

Specifications

Maximum Pressure: 600 psi (up to 100°F)
Maximum Temperature: 400°F

End Connections

- NPT Threaded *(female)*

Materials of Construction

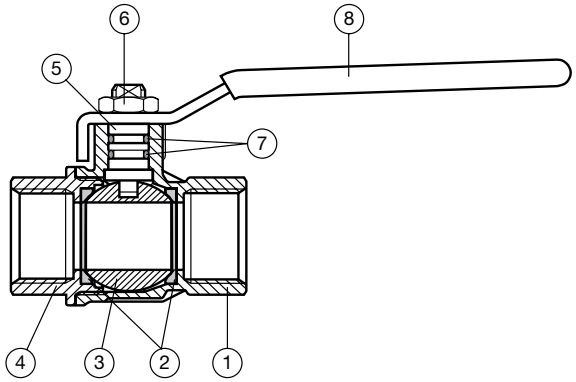

Part	Description	Qty	Material
1	Unplated NPT body	1	CW617N
2	Seat	2	PTFE
3	Chrome plated ball	1	CW617N
4	Unplated NPT end cap	1	CW617N
5	Nickel plated stem O'ring design	1	CW617N
6	Geomet Nut	1	CB4FF
7	O-ring	2	PFPM
8	Steel handle	1	DD11

Dimensions

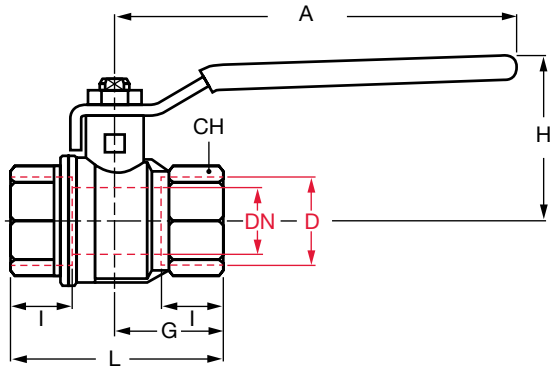

Pressure/Temperature Curve

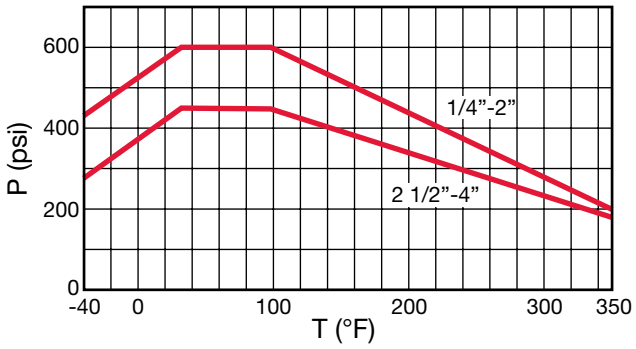

Size	Model Code	Part No.	D	DN	I	L	G	A	H	CH
1/4"	KHNVL-1/4NPT-2234	02092890	1/4"	0.314	0.472	1.771	0.885	3.228	1.563	0.787
3/8"	KHNVL-3/8NPT-2234	02092891	3/8"	0.393	0.472	1.771	0.885	3.228	1.563	0.787
1/2"	KHNVL-1/2NPT-2234	02092892	1/2"	0.59	0.61	2.322	1.161	3.937	1.695	0.984
3/4"	KHNVL-3/4NPT-2234	02092893	3/4"	0.787	0.669	2.519	1.259	4.724	1.988	1.22
1"	KHNVL-1NPT-2234	02092894	1"	0.984	0.826	3.188	1.594	4.724	2.153	1.574
1-1/4"	KHNVL-1-1/4NPT-2234	02092895	1-1/4"	1.259	0.905	3.661	1.83	6.22	2.988	1.929
1-1/2"	KHNVL-1-1/2NPT-2234	02092896	1-1/2"	1.574	0.905	4.015	2.007	6.22	3.236	2.125
2"	KHNVL-2NPT-2234	02092897	2"	1.968	1.043	4.763	2.381	6.22	3.5	2.696
2-1/2"	KHNVL-2-1/2NPT-2234	02093535	2-1/2"	2.559	1.26	6.141	3.07	10.039	5.196	3.346
3"	KHNVL-3NPT-2234	02093536	3"	3.149	1.377	6.968	3.484	10.039	5.511	3.897
4"	KHNVL-4NPT-2234	02093537	4"	3.937	1.633	8.504	4.252	10.039	6.062	4.921

Notes:
1. Dimensions are in inches (mm) and lbs (kg).
2. Dimensions are for general information only, all critical dimensions should be verified by requesting a certified print.

KHNVN Series

Stainless Steel

Specifications

Max. Temperature:

- 400°F

Max. Pressure:

- 1000 psig (up to 100°F)
- 2000 psig available KHNVS

End Connections

- NPT Threaded *(female)*

Dimensions

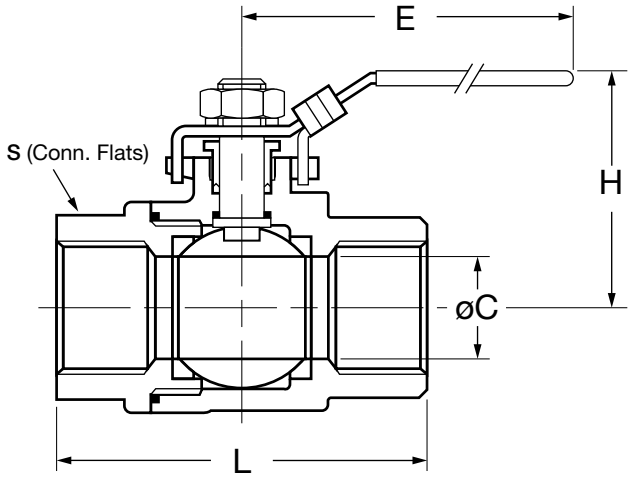

Description

The KHNVN Series manual ball valves are full port, 316 stainless steel, NPT threaded manual ball valves. They are equipped with a manual handle with a locking device.

Features

- Full port ball drilling for unrestricted flow
- Investment cast 2-piece SS body
- Blow-out proof stem
- Compact assembly
- Locking device

Materials of Construction

Body & End Cap

- ASTM A351 Cast SS Grade CF8M

Stem Seals

- PTFE

Seats:

- PTFE

Ball & Stem:

- 316 SS

Stem Nut & Washer:

- 304 SS

Handle & Locking Device:

- 304 SS

Handle Sleeve:

- Vinyl

Pressure vs. Temperature Curve

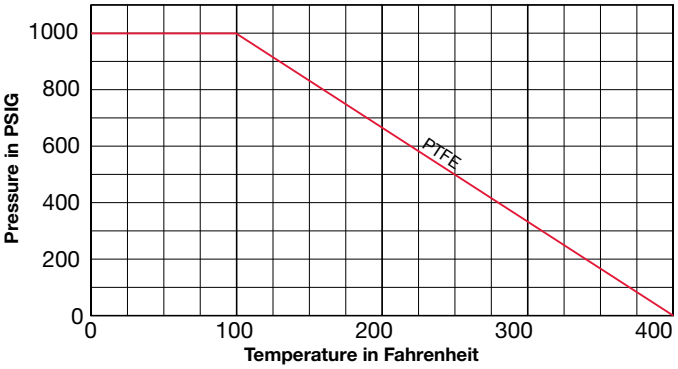

Size	Model Code	DN	øC	E	H	L	S	Weight
1/4”	KHNVN-1/4 NPT-3333	02089401	0.45	3.90	2.03	1.91	0.83	0.54
3/8”	KHNVN-3/8 NPT-3333	02089402	0.49	3.90	2.03	1.91	0.83	0.51
1/2”	KHNVN-1/2 NPT-3333	02089403	0.59	4.13	2.09	2.20	1.06	0.74
3/4”	KHNVN-3/4 NPT-3333	02089404	0.79	4.13	2.20	2.56	1.28	0.98
1”	KHNVN-1 NPT-3333	02089405	0.98	4.76	2.60	2.95	1.57	1.51
1 1/4”	KHNVN-1-1/4 NPT-3333	02089406	1.26	5.39	2.91	3.43	1.89	2.38
1 1/2”	KHNVN-1-1/2 NPT-3333	02089407	1.50	6.30	3.27	3.86	2.13	3.75
2”	KHNVN-2 NPT-3333	02089408	1.97	7.48	3.62	4.92	2.68	6.39

Notes:
1. Dimensions are in inches (mm) and lbs (kg).
2. Dimensions are for general information only, all critical dimensions should be verified by requesting a certified print.

A3

Process & Automated Valves

HYDAC's line of Process and Automated Valves complements our isolation valve knowhow and ability to supply high quality solutions to your valve requirements.

HVA Series

Inline Isolation Valve + Actuator

Specifications

- Temperature range: -4°F to 302°F (-20°C to 83°C)
- Maximum pressure: 225 psi
- Vacuum rating: 740mm Hg (97% vacuum)
- Seats & Seals: VITON = High compatibility with majority of fluids, not advised for steam.
- Air pressure required: 40 to 125 psi for double acting, 60 to 125 psi for spring return
- Body and Internals: Electroless Nickel Plated Brass

Models Available

- NC: spring return, normally closed
- NO: spring return, normally open
- DA: double acting

Description

- The HVA Series combines a pneumatic actuator and isolation valve into one body, which acts as a automated on/off valve.

Features

- Compact assembly / Saves space
- High CV / Less restriction *(low pressure drop)*
- Integrated actuators / Less parts to order and no mounting kits
- Integral NAMUR solenoid mounting pad

Model Code

HVA - 3/8 NPT - NO - 24VDC

Series
HVA = Valve + Actuator

Port Size *(NPT)*
3/8”, 1/2”, 3/4”, 1”, 1 1/4”, 1 1/2”, 2”

Function
NO = Spring return, Normally open, Air to close
NC = Spring return, Normally closed, Air to open
DA = Double acting

Solenoid Valve Options
(omit) = No solenoid valve included
24VDC = 24 VDC solenoid valve included
120VAC = 120 VAC solenoid valve included

Note: See pages A3-10 thru A3-11 for information on solenoid valves

Stroke Time *(based on 80 psi actuating pressure)*

Size	Spring Return		Double Acting	
	Spring	Air	Opening Air	Closing Air
3/8”	20 mS	10 mS	10 mS	10 mS
1/2”	20 mS	10 mS	10 mS	10 mS
3/4”	30 mS	20 mS	20 mS	20 mS
1”	40 mS	20 mS	20 mS	20 mS
1 1/4”	70 mS	40 mS	30 mS	30 mS
1 1/2”	110 mS	60 mS	60 mS	60 mS
2”	130 mS	70 mS	70 mS	70 mS

Cutaway View

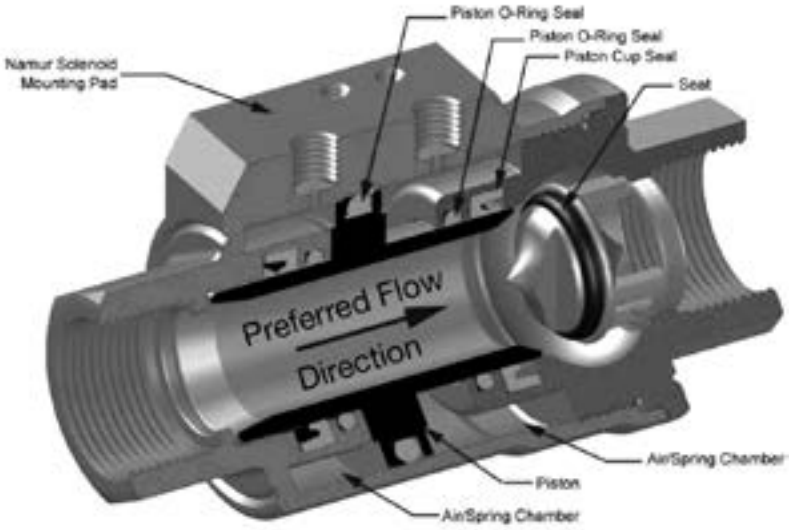

Dimensions

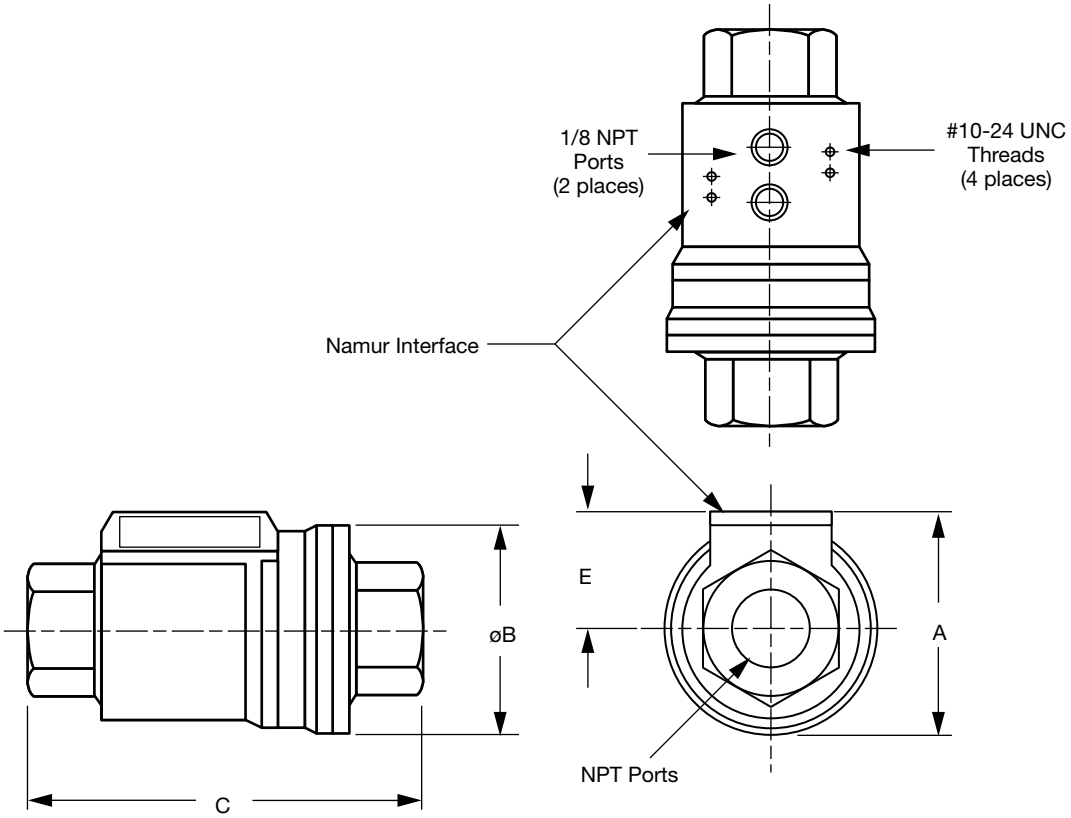

NPT Port Size	Cv	A	B	C	E	Wt	Air Consumption
3/8”	8	2.11	1.81	3.60	1.21	1.90	0.73 cu. inches
1/2”	10	2.33	2.00	4.21	1.31	2.30	1.05 cu. inches
3/4”	13	2.76	2.10	4.92	1.51	3.70	1.90 cu. inches
1”	17	3.00	2.72	5.31	1.63	4.15	2.45 cu. inches
1 1/4”	28	3.59	3.39	6.02	1.90	7.50	4.58 cu. inches
1 1/2”	57	4.00	3.78	6.73	2.12	8.15	6.70 cu. inches
2”	81	4.50	4.29	7.51	2.35	12.75	9.50 cu. inches

Notes:
1. Dimensions are in inches (mm) and lbs (kg).
2. Dimensions are for general information only, all critical dimensions should be verified by requesting a certified print.

ASV Series

Angle Seat Valve

Description

The Angle Seat Valve is a 2-way pneumatically actuated plug valve, which provides for automatic isolation of liquids, gases, steam and some aggressive fluids. Available with stainless steel or bronze bodies with plastic actuator housings.

Features

- Self-aligning stem seal reduces potential leak points
- High cycle life, provides long service life
- Compact assembly / Saves space
- Internal flow path designed to minimize pressure drop
- NAMUR Solenoid mounting pad

Easy Installation

The Angle Seat Valve can be mounted in any position. The actuator rotates 360° allowing for the selective positioning of the pneumatic inlet port.

Models Available

- Spring Return N.C. Bi-directional Flow
- Double Acting Bi-directional Flow

Stroke Time

Valve Size	Actuator Function	Closed to Open (mS)	Open to Closed (mS)
3/8”	NC	15	25
3/8”	DA	5	5
1/2”	NC	15	25
1/2”	DA	5	5
3/4”	NC	15	25
3/4”	DA	5	5
1”	NC	60	100
1”	DA	10	10
1 1/4”	NC	60	100
1 1/4”	DA	10	10
1 1/2”	NC	150	225
1 1/2”	DA	15	15
2”	NC	150	225
2”	DA	15	15

Specifications

Ambient Temperature Range
- 14° to 140°F (-10° to 60°C)

Fluid Temperature Range
- -14° to 358°F (-25° to 181°C)

Pressure/Viscosity Ratings
- From 0 to 230 psi
- Steam to 150 psi, Max 358°F
- Max Viscosity 600CST
- Required Air Pressure - 80 to 110 psi

ASV...2333
- Bronze Body & SS Plug
- PTFE seats & seals

ASV...3333
- 316 SS Body & Plug
- PTFE seats & seals

Leakage rate
- ANSI Class VI Shut off

Model Code

ASV - 1 NPT - 3333 - DA - 24DC

Series
ASV = Angle Seat Valve

Port Size *(NPT)*
3/8”, 1/2”, 3/4”, 1”, 1 1/4”, 1 1/2”, 2”

Materials
2333 = Bronze body & SS plug, PTFE seats & seals
3333 = 316SS body & plug, PTFE seats & seals

Function
NC = Spring return, normally closed
DA = Double acting

Solenoid Valve Options
(omit) = No solenoid valve included
24VDC = 24 VDC solenoid valve included
120VAC = 120 VAC solenoid valve included

Note: see page A3-10 to A3-11 for information on solenoid valves

Cutaway View

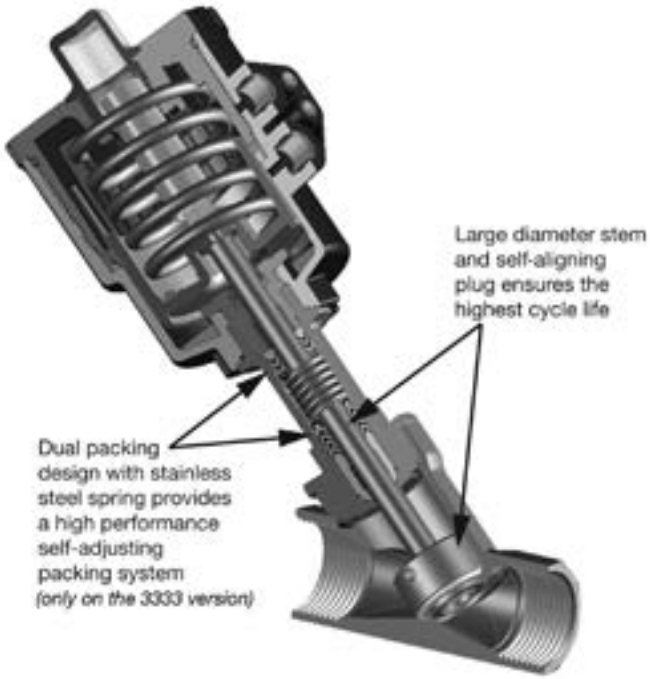

PN#02080105 / 01.17 / ACC1603-1753

Dimensions

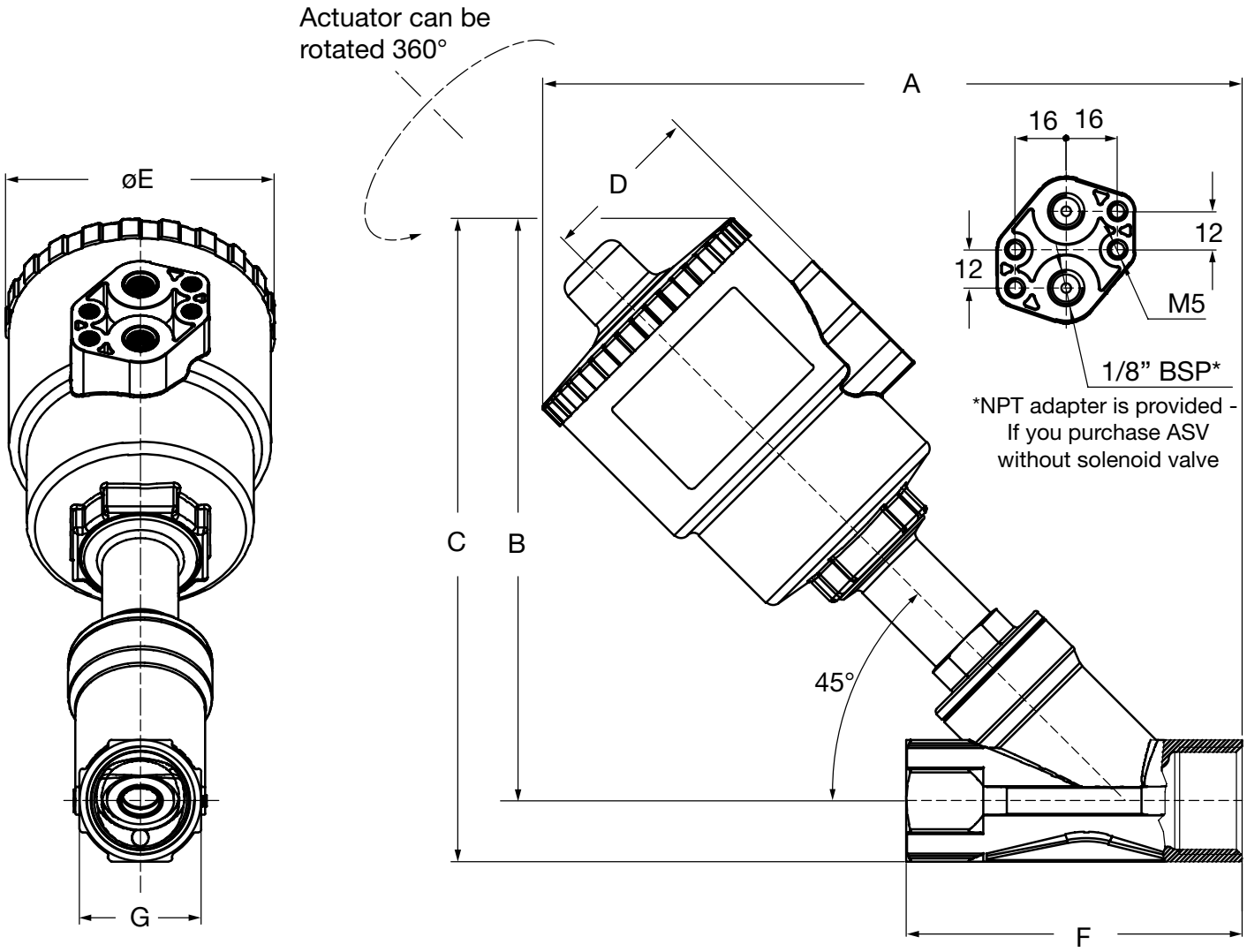

Type	NPT Port Size	CV	ASV...3333 (316 SS)							ASV...2333 (Bronze)							Wt.
			A	B	C	D	ø E	F	G	A	B	C	D	ø E	F	G	
NC/DA	3/8”	6	7.48	6.14	6.65	1.73	2.76	3.35	0.98	6.42	5.51	6.02	1.73	2.76	2.56	1.06	2.2
NC/DA	1/2”	7	7.48	6.14	6.65	1.73	2.76	3.35	0.98	6.42	5.51	6.02	1.73	2.76	2.56	1.06	2.2
DA	3/4”	12	7.68	6.30	6.93	1.73	2.76	3.74	1.22	6.81	5.79	6.42	1.73	2.76	2.95	1.08	2.6
NC	3/4”	12	7.68	6.30	6.93	1.73	2.76	3.74	1.22	6.81	5.79	6.42	1.73	2.76	2.95	1.08	2.6
DA	1”	23	8.62	7.17	7.95	1.99	3.32	4.13	1.50	8.11	6.93	7.72	1.99	3.32	3.54	1.61	3.5
NC	1”	23	8.62	7.17	7.95	1.99	3.32	4.13	1.50	8.11	6.93	7.72	1.99	3.32	3.54	1.61	3.7
DA	1 1/4”	33	8.90	7.32	8.23	1.99	3.32	4.72	1.85	8.46	7.09	8.07	1.99	3.32	4.33	1.97	4.2
NC	1 1/4”	33	10.47	8.90	9.80	2.61	4.58	4.72	1.85	10.04	8.66	9.65	2.61	4.58	4.33	1.97	6.6
DA	1 1/2”	54	10.67	9.06	10.16	2.61	4.58	5.12	2.13	10.63	9.25	10.39	2.61	4.58	4.72	2.28	7.9
NC	1 1/2”	54	12.09	10.47	11.57	3.05	5.54	5.12	2.13	12.05	10.67	11.81	3.05	5.54	4.72	2.28	8.8
DA	2”	78	11.22	9.45	10.79	2.61	4.58	5.91	2.60	11.02	9.45	10.83	2.61	4.58	5.91	2.76	9.5
NC	2”	78	12.64	10.87	12.20	3.05	5.54	5.91	2.60	12.44	10.87	12.24	3.05	5.54	5.91	2.76	11.7

Notes:
1. Dimensions are in inches and lbs.
2. Dimensions are for general information only, all critical dimensions should be verified by requesting a certified print.

KHL Series

Automated 2 Piece Ball Valve

Description

The KHL is a full port, 316 stainless steel, NPT threaded end automated ball valve.

It can be equipped with a manual handle or with direct mount pneumatic actuators.

Features

- Compact direct mount assembly / Saves space since there is no bracket
- High CV / Less restriction (low pressure drop)
- No stem packing to adjust / Reduces maintenance

Models Available

- Spring Return Actuator, normally closed
- Double Acting Actuator

Actuators

- Compact direct mount
- Anodized aluminum actuator
- NAMUR solenoid mounting adapter
- ISO 5211 mounting standard
- Visual position indicators
- High duty cycle
- Permanent lubrication
- Pneumatic double acting and spring return
- Min. 80 psi, Max. 120 psi air supply required
- Pneumatic solenoid valves sold separately

Note: See page A3-10 to A3-11 for information on solenoid valves
Contact HYDAC for more information on electric actuators.

Specifications

- Ball Valve 316SS body, ball and stem
- Blow out proof stem
- RPTFE Seats
- PTFE seals
- Viton stem O-ring
- NPT threaded end connection

Temperature Range

- -30° to 400°F max

Pressure Rating

- 1/4" to 1" 2000 psi (-30° to 100°F)
- 1 1/4" to 2" 1500 psi (-30° to 100°F)
- 0 psi @ 400°F

Pressure Vs. Temperature Chart

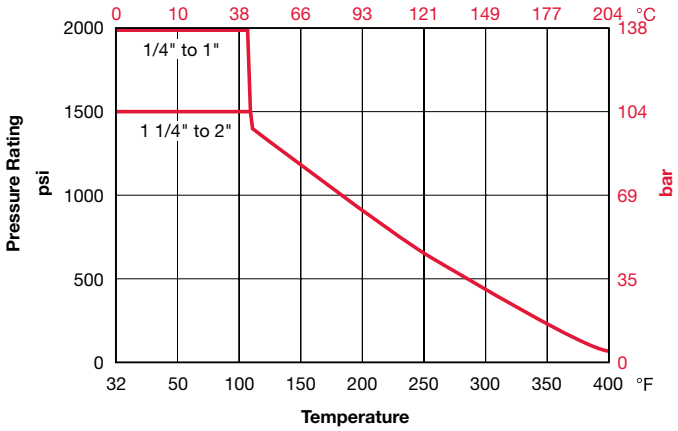

PN#02080105 / 01.17 / ACC1603-1753

Dimensions with normally closed spring return pneumatic actuator *(NPT threaded end connection, 2 pc. body)*

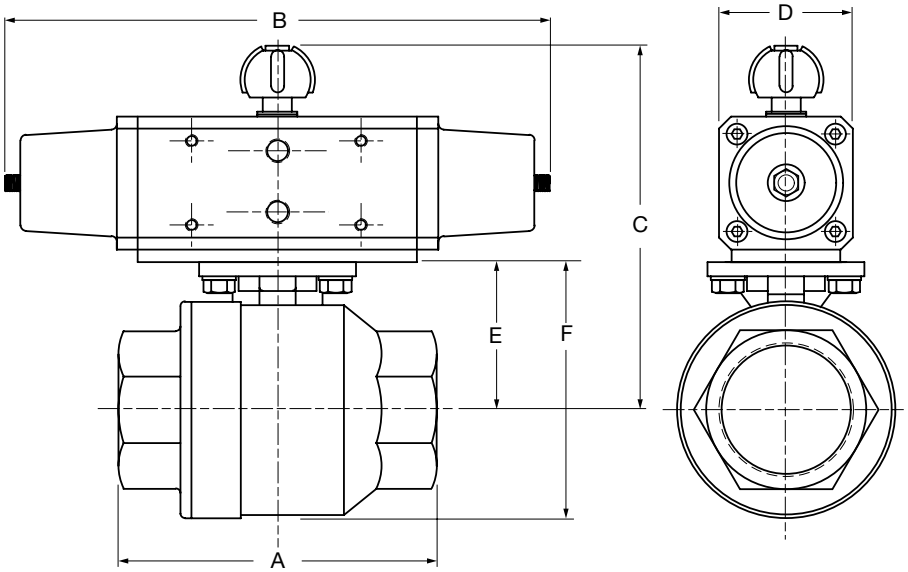

CV	Size NPT	A	B	C	D	E	F	Weight	Model Code Part No.
13	1/4”	2.56	8.62	4.85	2.15	1.65	2.28	3.9	KHL-1/4NPT-3333-NC 02083087
13	3/8”	2.56	8.62	4.85	2.15	1.65	2.34	3.9	KHL-3/8NPT-3333-NC 02083090
23	1/2”	2.95	8.62	4.85	2.15	1.65	2.35	3.9	KHL-1/2NPT-3333-NC 02083093
70	3/4”	3.15	9.36	5.36	2.54	1.77	2.71	5.7	KHL-3/4NPT-3333-NC 02083096
116	1”	3.54	11.47	5.99	2.81	2.05	3.05	7.5	KHL-1NPT-3333-NC 02083099
151	1 1/4”	4.33	11.47	6.22	2.81	2.28	3.63	8.6	KHL-1 1/4NPT-3333-NC 02083102
197	1 1/2”	4.72	12.48	7.32	3.12	2.68	4.33	13.0	KHL-1 1/2NPT-3333-NC 02083105
325	2”	5.51	13.92	8.10	3.51	3.07	4.85	18.5	KHL-2NPT-3333-NC 02083108

Dimensions with double acting pneumatic actuator *(NPT threaded end connection, 2 pc. body)*

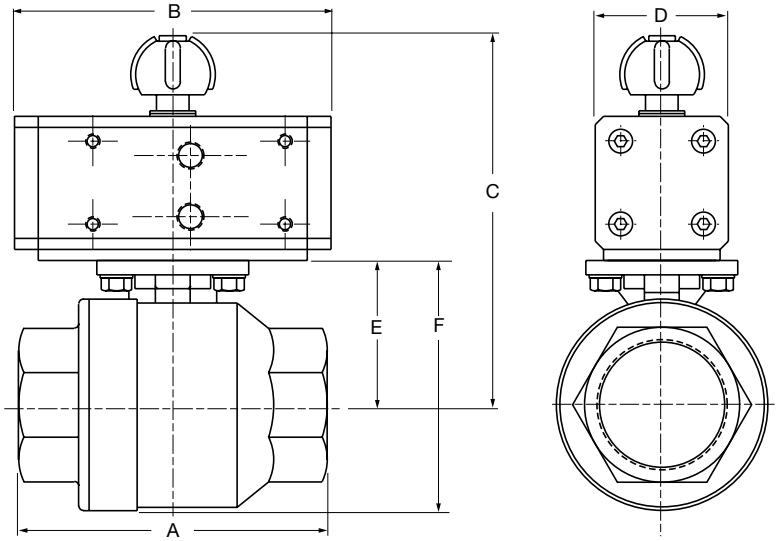

CV	Size NPT	A	B	C	D	E	F	Weight	Model Code Part No.
13	1/4”	2.56	5.07	4.85	2.15	1.65	2.28	3.2	KHL-1/4NPT-3333-DA 02083088
13	3/8”	2.56	5.07	4.85	2.15	1.65	2.34	3.2	KHL-3/8NPT-3333-DA 02083091
23	1/2”	2.95	5.07	4.85	2.15	1.65	2.35	3.3	KHL-1/2NPT-3333-DA 02083094
70	3/4”	3.15	5.07	4.97	2.15	1.77	2.71	3.5	KHL-3/4NPT-3333-DA 02083097
116	1”	3.54	5.62	5.48	2.34	2.05	3.05	5.0	KHL-1NPT-3333-DA 02083100
151	1 1/4”	4.33	5.62	5.71	2.34	2.28	3.63	6.1	KHL-1 1/4NPT-3333-DA 02083103
197	1 1/2”	4.72	6.59	6.62	2.81	2.68	4.33	9.4	KHL-1 1/2NPT-3333-DA 02083106
325	2”	5.51	6.59	7.01	2.81	3.07	4.92	12.4	KHL-2NPT-3333-DA 02083109

Notes:
1. Actuators are sized for 300 psi ΔP
2. Dimensions are in inches and lbs.
3. Dimensions are for general information only, all critical dimensions should be verified by requesting a certified print.

KHM3L Series

Automated 3 Piece Ball Valve

Description

The KHM3L is a full port, 316 stainless steel, 3 piece ball valve. It is available with NPT threads or socket weld connectors.

It can be equipped with a manual handle or with direct mount pneumatic actuators.

Features

- Compact direct mount assembly / Saves space since there is no bracket
- High CV / Less restriction *(low pressure drop)*
- No stem packing to adjust / Reduces maintenance
- 3 piece design allows inline maintenance for socket weld connections

Models Available

- Spring Return Actuator, normally closed
- Double Acting Actuator
- Manual Handle *(contact HYDAC)*

Actuators

- Compact direct mount
- Anodized aluminum actuator
- NAMUR solenoid mounting adapter
- ISO 5211 mounting standard
- Visual position indicators
- High duty cycle
- Permanent lubrication
- Pneumatic double acting and spring return
- Min. 80 psi, Max. 120 psi air supply required
- Pneumatic solenoid valves sold separately

Note: See page A3-10 to A3-11 for information on solenoid valves
Contact HYDAC for more information on electric actuators.

Specifications

- Ball Valve 316SS body, ball and stem
- Blow-out proof stem
- RPTFE seats
- PTFE seals
- Viton stem O-ring

Temperature Range

- -30° to 400°F max

Pressure Rating

- 1000 psi @ -30° to 100°F
- 0 psi @ 400°F

Pressure Vs. Temperature Chart

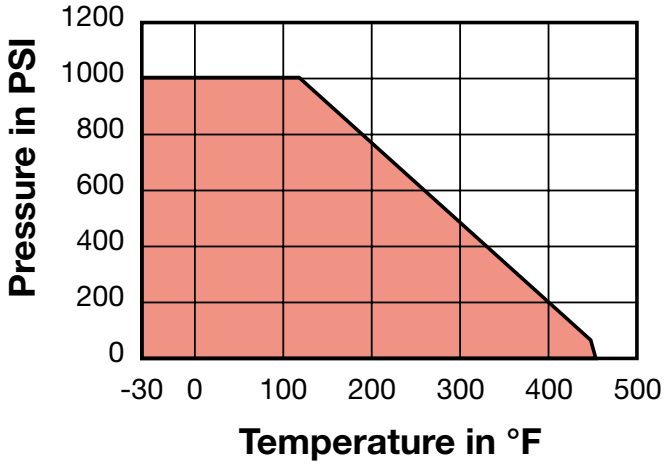

PN#02080105 / 01.17 / ACC1603-1753

Dimensions with normally closed spring return pneumatic actuator

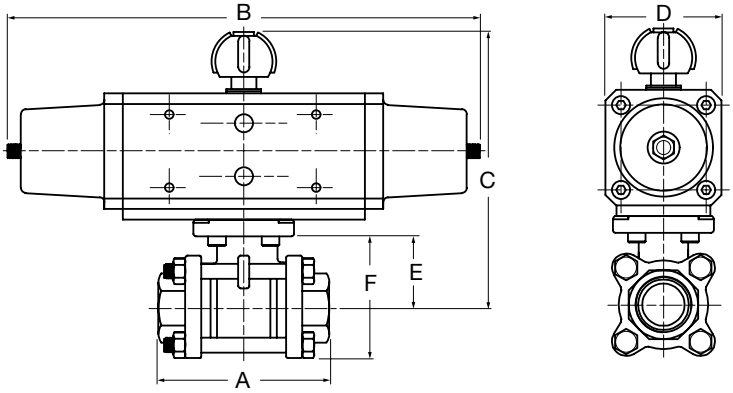

CV	Size	A	B	C	D	E	F	Wt	Threaded Model Code Part No.	Socket Weld Model Code Part No.
13	1/4”	2.56	8.62	4.85	2.15	1.65	2.60	4.3	KHM3L-1/4NPT-3333-NC 02083039	KHM3L-1/4SW-3333-NC 02083042
13	3/8”	2.56	8.62	4.85	2.15	1.65	2.60	4.3	KHM3L-3/8NPT-3333-NC 02083045	KHM3L-3/8SW-3333-NC 02083048
23	1/2”	2.95	8.62	4.85	2.15	1.65	2.60	4.3	KHM3L-1/2NPT-3333-NC 02083051	KHM3L-1/2SW-3333-NC 02083054
70	3/4”	3.15	9.36	5.36	2.54	1.77	2.75	6.2	KHM3L-3/4NPT-3333-NC 02083057	KHM3L-3/4SW-3333-NC 02083060
116	1”	3.54	11.47	5.99	2.81	2.05	3.32	8.4	KHM3L-1NPT-3333-NC 02083063	KHM3L-1SW-3333-NC 02083066
151	1 1/4”	4.33	11.47	6.22	2.81	2.28	3.68	9.4	KHM3L-1 1/4NPT-3333-NC 02083069	KHM3L-1 1/4SW-3333-NC 02083072
197	1 1/2”	4.72	12.48	7.32	3.12	2.68	4.30	14.3	KHM3L-1 1/2NPT-3333-NC 02083075	KHM3L-1 1/2SW-3333-NC 02083078
325	2”	5.51	13.92	8.10	3.51	3.07	4.85	20.1	KHM3L-2NPT-3333-NC 02083081	KHM3L-2SW-3333-NC 02083084

Dimensions with double acting pneumatic actuator

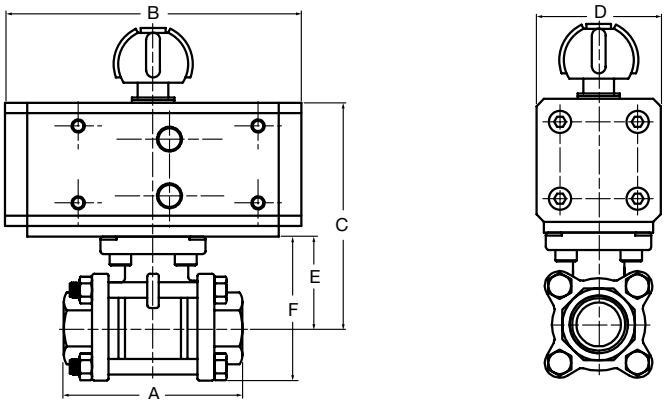

CV	Size	A	B	C	D	E	F	Wt	Threaded Model Code Part No.	Socket Weld Model Code Part No.
13	1/4”	2.56	5.07	4.85	2.15	1.65	2.60	3.5	KHM3L-1/4NPT-3333-DA 02083040	KHM3L-1/4SW-3333-DA 02083043
13	3/8”	2.56	5.07	4.85	2.15	1.65	2.60	3.5	KHM3L-3/8NPT-3333-DA 02083046	KHM3L-3/8SW-3333-DA 02083049
23	1/2”	2.95	5.07	4.85	2.15	1.65	2.60	3.6	KHM3L-1/2NPT-3333-DA 02083052	KHM3L-1/2SW-3333-DA 02083055
70	3/4”	3.15	5.07	4.97	2.15	1.77	2.75	3.9	KHM3L-3/4NPT-3333-DA 02083058	KHM3L-3/4SW-3333-DA 02083061
116	1”	3.54	5.62	5.48	2.34	2.05	3.32	5.9	KHM3L-1NPT-3333-DA 02083064	KHM3L-1SW-3333-DA 02083067
151	1 1/4”	4.33	5.62	5.71	2.34	2.28	3.68	7.2	KHM3L-1 1/4NPT-3333-DA 02083070	KHM3L-1 1/4SW-3333-DA 02083073
197	1 1/2”	4.72	6.59	6.62	2.81	2.68	4.30	10.1	KHM3L-1 1/2NPT-3333-DA 02083076	KHM3L-1 1/2SW-3333-DA 02083079
325	2”	5.51	6.59	7.01	2.81	3.07	4.85	13.5	KHM3L-2NPT-3333-DA 02083082	KHM3L-2SW-3333-DA 02083085

Notes:
1. Actuators are sized for 300 psi ΔP
2. Dimensions are in inches and lbs.
3. Dimensions are for general information only, all critical dimensions should be verified by requesting a certified print.

Solenoid Valves

Namur 3-way and 4-way

3-Way

Connector

Water tight, NEMA 4/4X, mini-DIN, Cord Grip PG9 connection

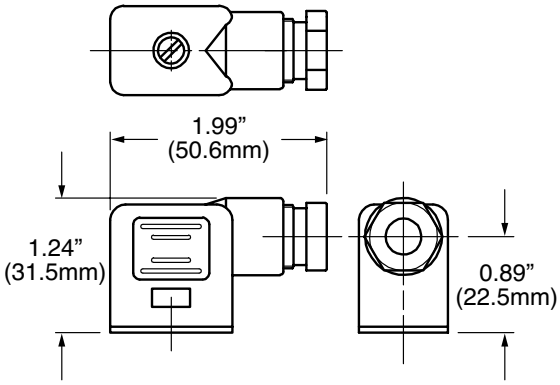

4-Way

Namur Pattern

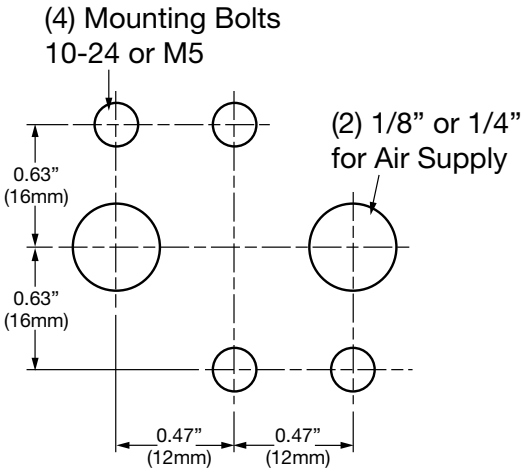

Model Code	Use With	Connectors	Nominal Coil Power	Part Number
Solenoid Valve Namur, 3-way, 24 VDC, Mini DIN	NO / NC valves with Spring Return	Mini-DIN Cord Grip PG9	AC = 8.5 watts DC = 10.5 watts	02082887
Solenoid Valve Namur, 3-way, 120 VDC, Mini DIN	NO / NC valves with Spring Return			02082888
Solenoid Valve Namur, 4-way, 24 VDC, Mini DIN	Double Acting valves			02082889
Solenoid Valve Namur, 4-way, 120 VDC, Mini DIN	Double Acting valves			02082890

Dimensions

3-way Solenoid Valve used with N.O. or N.C. Valves

2 Sets of bolts provided: #10-24 and M5

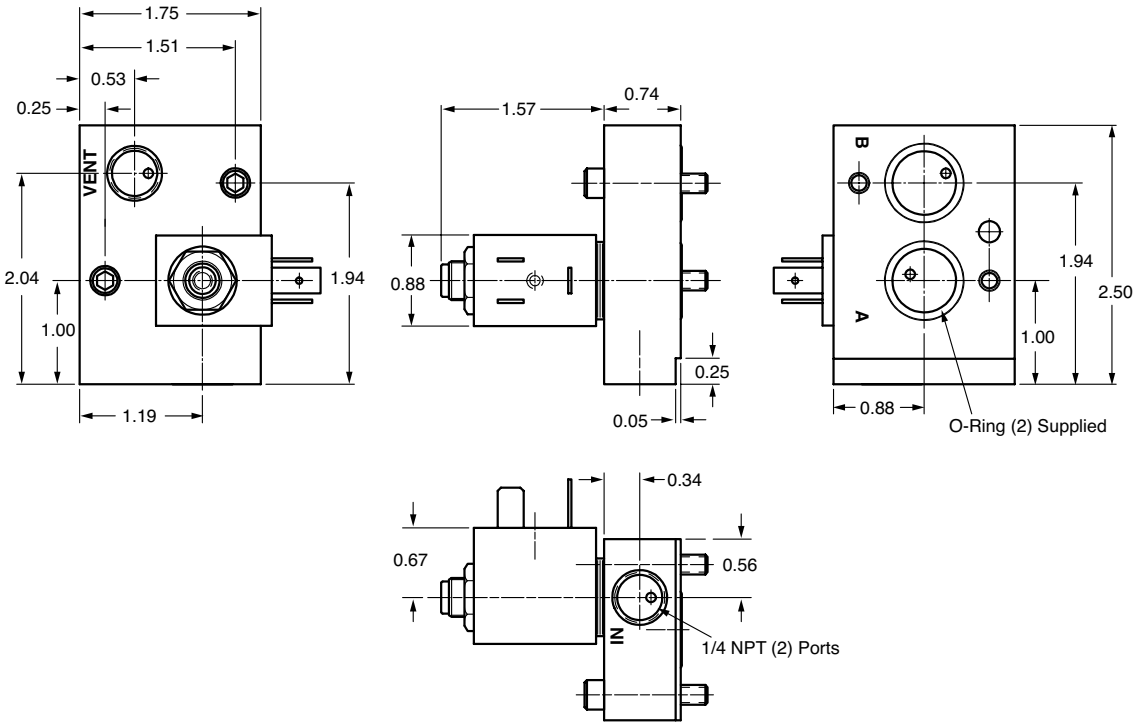

4-way Solenoid Valve used with Double Acting Valves

2 Sets of bolts provided: #10-24 and M5

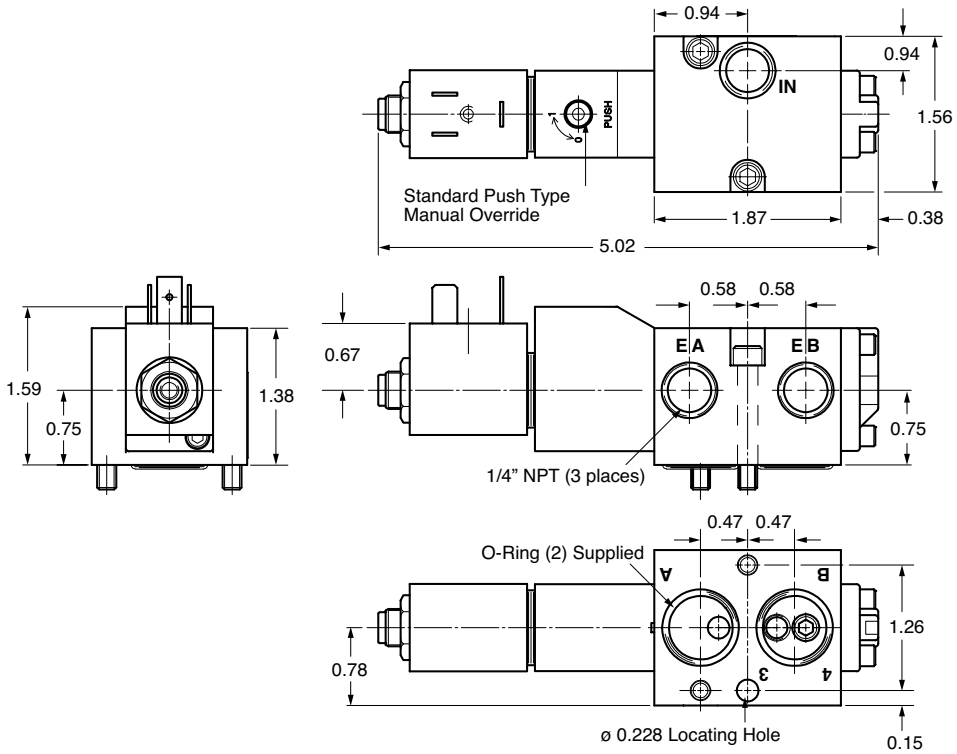

Dimensions are in inches.
Dimensions are for general information only, all critical dimensions should be verified by requesting a certified print.

Notes

PN#02080105 / 01.17 / ACC1603-1753

A4

Coaxial Valves

HYDAC Coaxial Valves offer an isolation valve solution for highly contaminated applications that traditionally can harm the seats of a traditional ball valve. We have expanded this offering to include many solutions outside traditional isolation. Please contact HYDAC for more information on this offering or visit our global site: **hydac.com** and search CX valves.

Overview

Switching Cycles and Switching times

Valve Type		Control System	Series / Brochure Number
	2/2-way Piston valves	Pilot operated	CXK01, CXK02 **E 6.175***
	2/2-way Coaxial valves	Direct acting	CX02, CX03, CX04, CX05 **E 6.176***
		Pilot operated	CX06, CX07, CX08, CX09 **E 6.178***
	3/2-way Coaxial valves	Direct acting	CX03, CX04 **E 6.180***
		Pilot operated	CX06, CX07 **E 6.181***
	2/2-way Coaxial valves Flange design	Direct acting	CX02F, CX03F, CX05F **E 6.183***
		Pilot operated	CX06F, CX07F, CX08F **E 6.184***
	2/2-way Coaxial valves Modular design	Direct acting	CX03M, CX04M, CX05M **E 6.177***
		Pilot operated	CX06M, CX07M, CX08M **E 6.179***
	2/2-way Coaxial valves Compact	Pilot operated	CXR **E 6.188***

Switching Cycles and Switching times
(continued)

Valve Type		Control System	Series / Brochure Number
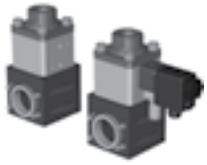	2/2-way Coaxial valves Compact, modular design	Pilot operated	CXRM **E 6.189***
	2/2-way Coaxial valves Compact, modular design	Pilot operated	CXC **E 6.190***
	2/2-way Coaxial valves High pressure	Direct acting	CXH1, CXH2 **E 6.182***
	2/2-way Coaxial valves ATEX	Direct acting	CXEX **E 6.186***
	2/2-way Coaxial valves ATEX, modular design	Direct acting	CXMEX **E 6.185***
	3/2-way Coaxial valves ATEX	Direct acting	CX EX **E 6.191***
	2/2 way Pressure relief valves Coaxial design	Pilot operated	CX CBV **E 6.172***
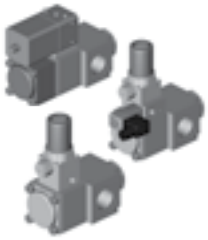	2/2 way Pressure relief valves Right angle design	Pilot operated	CX DBV **E 6.173***

Contact HYDAC Accessories Group for more information or visit our global website: www.HYDAC.com and search the ***brochure number** for details on the valve

Notes

A5

Flow Control Valves

The HYDAC family of flow control valves permit safe, simple and repeatable control of hydraulic fluids at operating pressures to 5000 psi. The standard slotted control spindle allows for a wide range of infinitely variable flow adjustments with excellent flow characteristics. Precise adjustment of flow is achieved by a micrometer style adjustment knob featuring a color coded flow indicator for accurate, easy-to-read visual flow reference. Design modifications and special materials are available for corrosive fluids such as phosphate ester, acids and caustics.

Flow Control Valve Design Features and Options

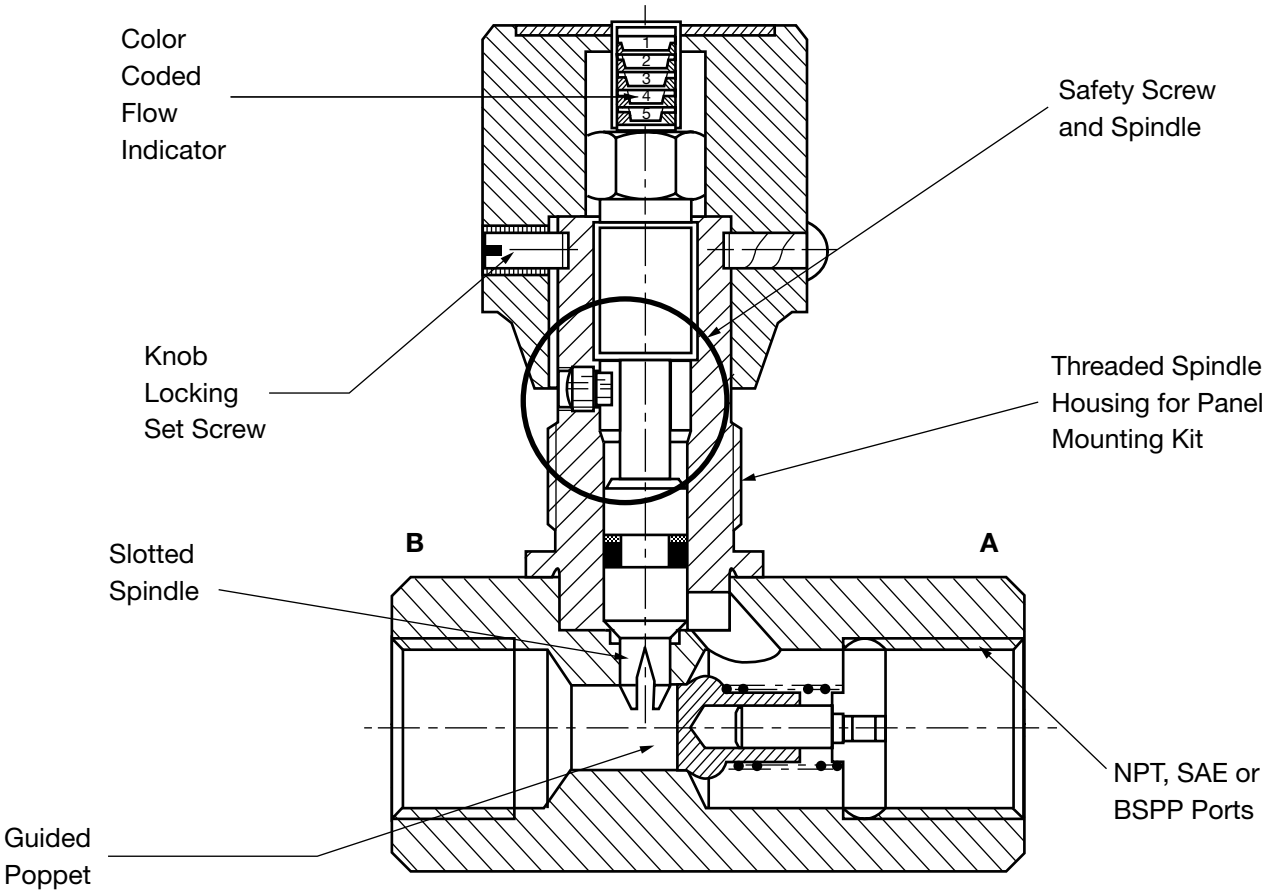

Introduction

Our complete line of flow control valves are designed and manufactured by our ISO 9001 certified FLUTEC Division.

Description

- The HYDAC family of flow control valves permit safe, simple and repeatable control of hydraulic fluids at operating pressures to 5000 psi.
- The standard slotted control spindle allows for a wide range of infinitely variable flow adjustments with excellent flow characteristics.
- Precise adjustment of flow is achieved by a micrometer style adjustment knob featuring a color coded flow indicator for accurate, easy-to-read visual flow reference.
- Design modifications and special materials are available for corrosive fluids such as phosphate ester, acids and caustics.

Valve Design

HYDAC flow control valves can be adjusted easily and precisely by means of the control knob. Increasing the number of turns from the fully closed position provides a steady increase of the flow rate. The colored scale permits accurate repetition of settings and the colored triangle on the rising spindle provides a visual indication of the increasing cross section of the flow area. A set screw on the side locks the knob at the desired setting.

HYDAC flow control valves include a unique safety spindle design feature. As the valve spindle is turned counter-clockwise, the spindle shoulder will engage the safety screw limiting the travel of the spindle. The hardened, high-strength steel safety screw is sealed in position to discourage tampering.

Product Features

- Size 16 and under, zinc plated body, size 20 and up, phosphated body
- FPM *(Fluoroelastomer)* seals
- Slotted control spindle for precise and linear flow adjustments
- Exclusive safety spindle design
- Color coded spindle for accurate flow control
- Guided poppets for smoother, chatter free operation

Available Options

- Panel mounting kit *(available for size 06-16 only)*
- 25 and 65 psi cracking pressure springs *(7 psi standard)*

PN#02080105 / 01.17 / ACC1603-1753

DV & DVP Series

Needle Valves

DV Series
Inline Mounting

DVP Series
Manifold Mounting

Specifications

- 5000 psi operating Pressure
- 8 Sizes, 1/8” - 1-1/2”
- SAE O-Ring, NPT or BSPP Threaded Connections; Manifold Mounting; and Cartridge Type
- Flows to 80 gpm
- Carbon steel housing
- FPM *(Fluoroelastomer)* O-Rings *(standard)*
- Color coded spindle for accurate flow control
- Provision for panel mounting
- Unique safety spindle design
- Temperature Range: -4˚ to 212˚F at full pressure
- Size 16 and under, zinc plated
- Size 20 and up, phosphated

Hydraulic Symbol

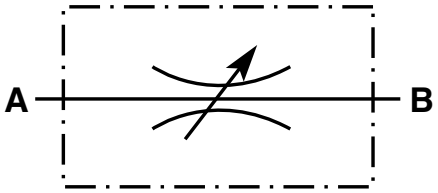

Model Code

DV - 06 - 01 .X / 5 - S

Needle Valve

DV	=	Inline Mounting
DVP	=	Manifold Mounting
DVE	=	Cartridge Valve

Nominal Sizes

DV & DVP		**SAE** *(DV only)*		**NPTF** *(DV Only)*		**BSPP** *(DV Only)*
Nom. Size		**Tube Size**	**Thread Size**	**Pipe Size**	**Pipe OD**	**Thread Size**
06	=			1/8”	0.405”	G1/8
08	=	-4	7/16-20 UNF	1/4”	0.540”	G1/4
10	=	-6	9/16-18 UNF	3/8”	0.675”	G3/8
12	=	-8	3/4-16 UNF	1/2”	0.840”	G1/2
16	=	-12	1-1/16-12 UN	3/4”	1.050”	G3/4
20	=	-16	1-5/16-12 UN	1”	1.315”	G1
25	=	-20	1-5/8-12 UN	1-1/4”	1.660”	G1 1/4
30	=	-24	1-7/8-12 UN	1-1/2”	1.900	G1 1/2

DVE

Nom Size		**SAE Cavity**	**BSPP Cavity**
08	=	3/4-16 UNF	G1/2
10	=	7/8-14 UNF	G1/2
12	=	1-1/16-12 UN	G3/4
16	=	1-5/16-12 UN	G1

Housing Material

01	=	Carbon Steel

Modification Number

Port Configuration

(omit)	=	DVP Only
5	=	NPTF - ANSI B1.20.3
12	=	SAE - SAEJ1926 Ports with ISO 725 Threads and O-Ring Sealing
0	=	BSPP to DIN 3852, Part 2-X

Supplementary Details

S	=	Panel Mounting Kit *(not available in sizes 20, 25, 30)*

Pressure Drop Curves

DV, DVP Series

Flow Direction: A to B / Throttled Flow

Size 06

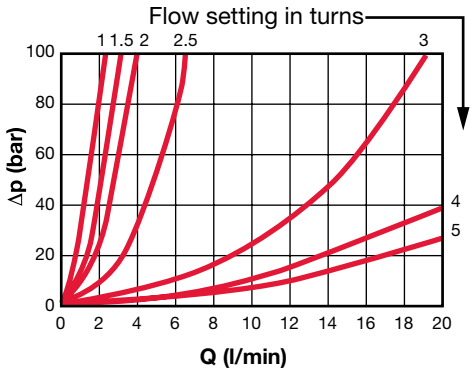

Size 08

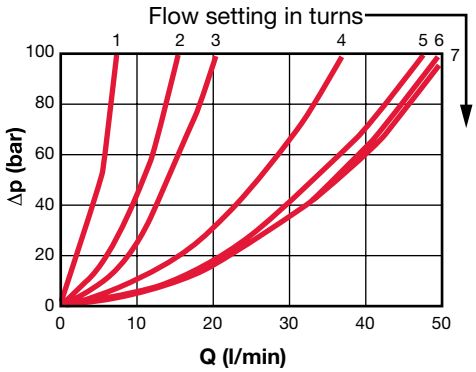

Size 10

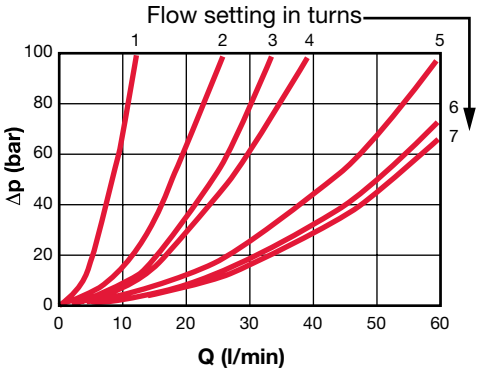

Size 12

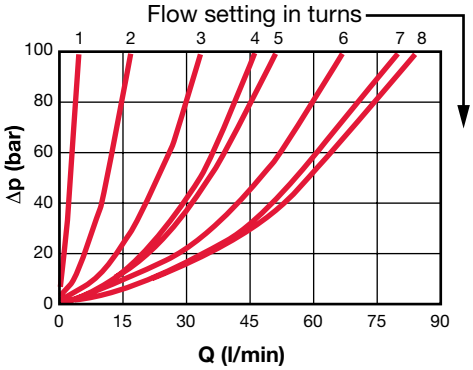

Size 16

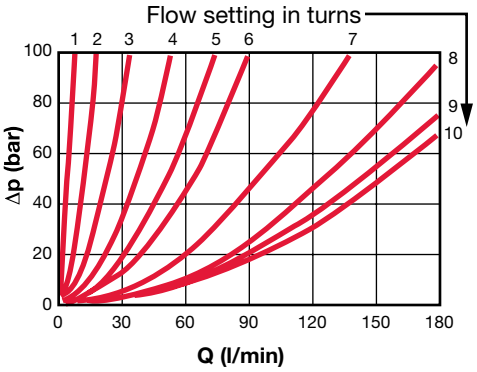

Size 20, 25, 30

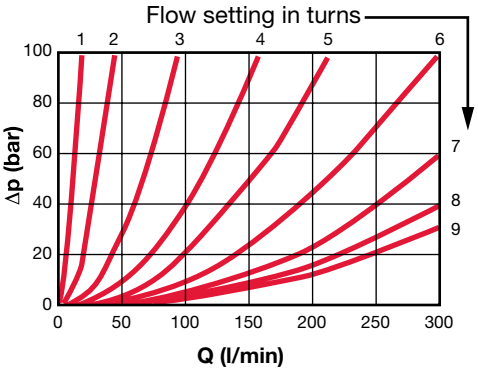

Pressure Drop curves were established by using mineral oil with kinematic viscosity 165 SUS at 112°F / 50°C

Dimensions

DV Series Inline Needle Valve

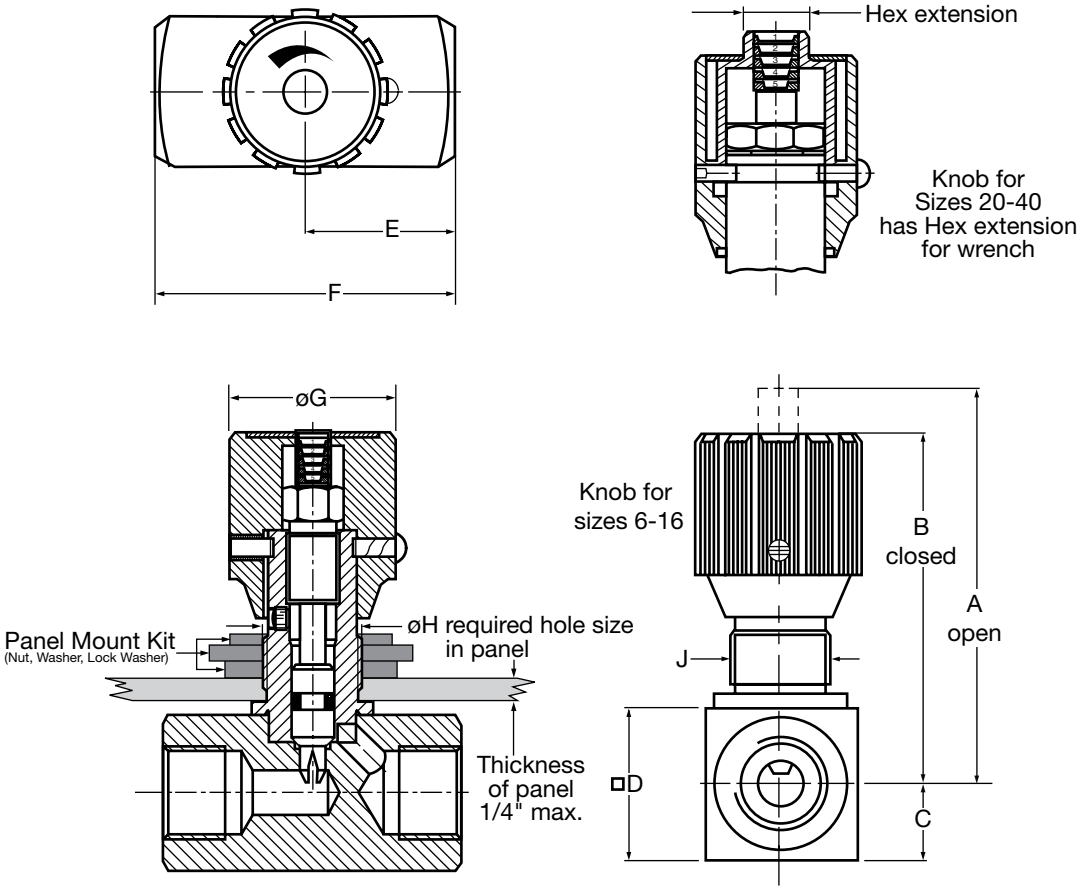

Model Code	Port Size NPTF	Port Size SAE	A	B	C	D	E	F	øG	øH	J*	Hex	Weight
DV-06	1/8”	5/16-24UNF	2.16 (55)	1.97 (50)	0.31 (8)	0.63 (16)	0.75 (19)	1.50 (38)	0.94 (24)	0.51 (13)	Pg 7 thread	—	0.26 (0.12)
DV-08	1/4”	7/16-20UNF	2.83 (72)	2.56 (65)	0.49 (12.5)	0.98 (25)	0.94 (24)	1.89 (48)	1.14 (29)	0.75 (19)	Pg 11 thread	—	0.55 (0.25)
DV-10	3/8”	9/16-18UNF	2.91 (74)	2.64 (67)	0.59 (15)	1.18 (30)	1.14 (29)	2.28 (58)	1.14 (29)	0.75 (19)	Pg 11 thread	—	0.88 (0.40)
DV-12	1/2”	3/4-16UNF	3.62 (92)	3.23 (82)	0.69 (17.5)	1.38 (35)	1.34 (34)	2.68 (68)	1.50 (38)	0.91 (23)	Pg 16 thread	—	1.5 (0.70)
DV-16	3/4”	1-1/16-12UN	4.17 (105)	3.78 (96)	0.89 (22.5)	1.77 (45)	1.53 (39)	3.07 (78)	1.50 (38)	0.91 (23)	Pg 16 thread	—	2.6 (1.2)
DV-20	1”	1-5/16-12UN	5.71 (145)	5.04 (128)	0.98 (25)	1.97 (50)	2.13 (54)	4.25 (108)	1.93 (49)	1.50 (38)	Pg 29 thread	3/4 (19)	4.6 (2.1)
DV-25	1-1/4”	1-5/8-12UN	5.91 (150)	5.24 (133)	1.18 (30)	2.36 (60)	2.13 (54)	4.25 (108)	1.93 (49)	1.50 (38)	Pg 29 thread	3/4 (19)	6.2 (2.8)
DV-30	1-1/2”	1-7/8-12UN	6.10 (155)	5.43 (138)	1.38 (35)	2.76 (70)	2.13 (54)	4.25 (108)	1.93 (49)	1.50 (38)	Pg 29 thread	3/4 (19)	7.7 (3.5)

*Pg style thread per DIN 40430
Notes:
1. Dimensions are in inches (mm) and lbs (kg).
2. Dimensions are for general information only, all critical dimensions should be verified by requesting a certified print.

Panel Mount Kits

Size	Model Code	Part Number
6	Kit Panel Mount DV06	00705300
8/10	Kit Panel Mount DV08	00705310
12/16	Kit Panel Mount DV12	00705302

Dimensions

DVP Manifold Mount Needle Valve

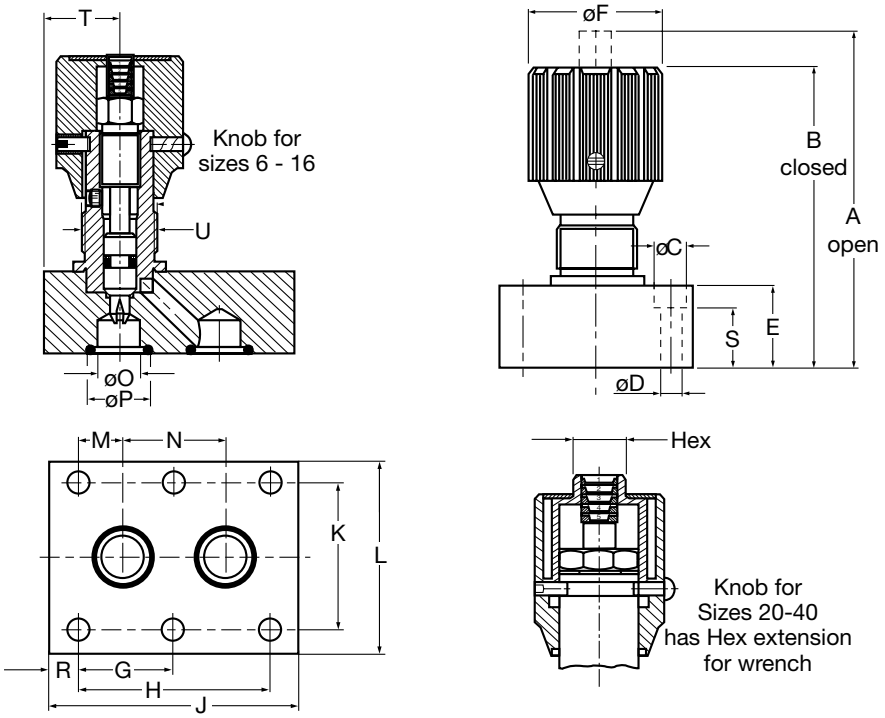

Model Code	Nom. Size	A	B	øC	øD	E	øF	G*	H	J	K	L	M	N	øO	øP	R	S	T	U**	Hex	Wt.
DVP-06	1/8”	2.48 (63)	2.28 (58)	.43 (11)	.26 (6.6)	.63 (16)	.94 (24)	–	.748 (19)	1.38 (35)	1.112 (28.5)	1.63 (41.5)	0.059 (1.5)	.630 (16)	0.197 (5)	0.382 (9.7)	0.315 (8)	0.35 (9)	0.37 (9.5)	Pg 7 thread	–	0.44 (0.2)
DVP-08	1/4”	3.11 (79)	2.83 (72)	.43 (11)	.26 (6.6)	.79 (20)	1.14 (29)	–	1.378 (35)	1.87 (47.5)	1.319 (33.5)	1.81 (46)	0.177 (4.5)	1.004 (25.5)	0.276 (7)	0.500 (12.7)	0.256 (6.5)	0.51 (13)	0.47 (12)	Pg 11 thread	–	0.88 (0.4)
DVP-10	3/8”	3.31 (84)	3.03 (77)	.43 (11)	.26 (6.6)	.98 (25)	1.14 (29)	–	1.319 (33.5)	2.01 (51)	1.496 (38)	2.01 (51)	0.165 (4.2)	1.004 (25.5)	0.394 (10)	0.614 (15.6)	0.335 (8.5)	0.71 (18)	0.55 (14)	Pg 11 thread	–	1.3 (0.6)
DVP-12	1/2”	3.90 (99)	3.50 (89)	.43 (11)	.26 (6.6)	.98 (25)	1.50 (38)	–	1.496 (38)	2.95 (75)	1.752 (44.5)	2.26 (57.5)	0.157 (4.0)	1.181 (30)	0.512 (13)	0.732 (18.6)	0.728 (18.5)	0.71 (18)	0.89 (22.5)	Pg 16 thread	–	2.2 (1.0)
DVP-16	3/4”	4.45 (113)	4.05 (103)	.55 (14)	.35 (9.0)	1.18 (30)	1.50 (38)	1.496 (38)	2.992 (76)	3.68 (93.5)	2.126 (54)	2.76 (70)	0.433 (11)	2.126 (54)	0.669 (17)	0.965 (24.5)	0.335 (8.5)	0.83 (21)	0.77 (19.5)	Pg 16 thread	–	3.7 (1.7)
DVP-20	1”	6.5 (165)	5.83 (148)	.55 (14)	.35 (9.0)	1.77 (45)	198 (49)	1.870 (47.5)	3.740 (95)	4.37 (111)	2.362 (60)	3.01 (76.5)	0.753 (19.1)	2.244 (57)	0.866 (22)	1.201 (30.5)	0.315 (8)	1.42 (36)	1.24 (31.5)	Pg 29 thread	3/4 (19)	8.0 (3.6)
DVP-25	1 1/4”	6.5 (165)	5.83 (148)	.71 (18)	.45 (11.5)	1.77 (45)	1.93 (49)	2.362 (60)	4.744 (120.5)	5.63 (143)	2.992 (76)	3.94 (100)	0.819 (20.8)	3.130 (79.5)	1.122 (28.5)	1.472 (37.4)	0.433 (11)	1.34 (34)	1.81 (46)	Pg 29 thread	3/4 (19)	12.1 (5.5)
DVP-30	1 1/2”	6.69 (170)	6.02 (153)	.79 (20)	.55 (14)	1.97 (50)	193 (49)	2.815 (71.5)	5.630 (143)	6.73 (171)	3.622 (92)	4.53 (115)	0.937 (23.8)	3.740 (95)	1.378 (35)	1.709 (43.4)	.591 (15)	1.46 (37)	1.53 (39)	Pg 29 thread	3/4 (19)	16.6 (7.5)

*Only 4 mounting holes are used on sizes 06, 08, 10, and 12
**Pg style thread per DIN 40430
Notes:
1. Dimensions are in inches (mm) and lbs (kg).
2. Dimensions are for general information only, all critical dimensions should be verified by requesting a certified print.

DRV & DRVP Series

Flow Control Valves

DRV Series
Inline Mounting

DRVP Series
Manifold Mounting

Specifications

- 5000 psi operating pressure
- 8 sizes, 1/8” - 1-1/2”
- NPTF or SAE O-Ring threaded connections, or manifold mounting
- Flows to 80 GPM
- Carbon steel housing
- FPM *(Fluoroelastomer)* O-Rings *(standard)*
- Color coded spindle for accurate flow control
- Provision for panel mounting
- Unique safety spindle design
- Temperature Range: -4° to 212°F at full pressure
- Size 16 and under zinc plated
- Size 20 and up phosphated

Hydraulic Symbol

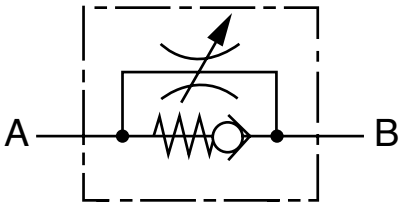

Model Code

DRV - 06 - 01 . X / 5 - 25 - S

Flow Control Valve

DRV	=	Inline Mounting
DRVP	=	Manifold Mounting

Nominal Sizes

Nominal Size *(DRV + DRVP)*		**SAE** *(DRV only)* **Tube Size**	**Thread Size**	**NPTF** *(DRV Only)* **Pipe Size**	**Pipe OD**	**BSPP** *(DRV Only)* **Thread Size**
06	=	-2	5/16-24 UNF	1/8”	0.405”	G1/8
08	=	-4	7/16-20 UNF	1/4”	0.540”	G1/4
10	=	-6	9/16-18 UNF	3/8”	0.675”	G3/8
12	=	-8	3/4-16 UNF	1/2”	0.840”	G1/2
16	=	-12	1-1/16-12 UN	3/4”	1.050”	G3/4
20	=	-16	1-5/16-12 UN	1”	1.315”	G1
25	=	-20	1-5/8-12 UN	1-1/4”	1.660”	G1 1/4
30	=	-24	1-7/8-12 UN	1-1/2”	1.900”	G1 1/2

Housing Material

01	=	Carbon Steel

Modification Number

Port Configuration

(omit)	=	DRVP only
0	=	BSPP to DIN 3852, Part 2 -X
5	=	NPTF *(ANSI B1.20.3)*
12	=	SAE - SAEJ1926 Ports with ISO 725 Threads and O-Ring Sealing

Cracking Pressure

(omit)	=	7 psi standard
25	=	25 psi optional
65	=	65 psi optional

Supplementary Details

S	=	Panel Mounting Kit *(not available in sizes 20, 25, 30)*

Pressure Drop Curves

Flow Direction: A to B / Throttled Flow

Size 06

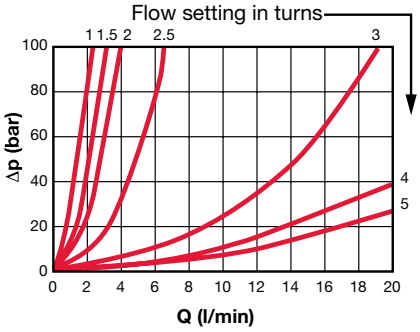

Size 08

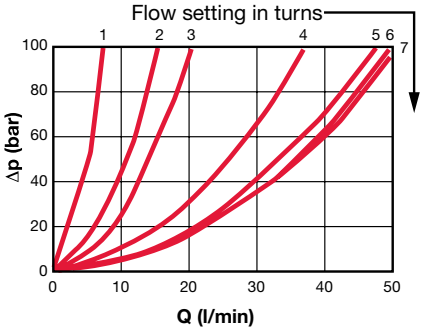

Size 10

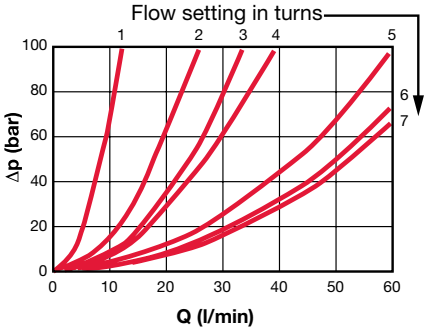

Size 12

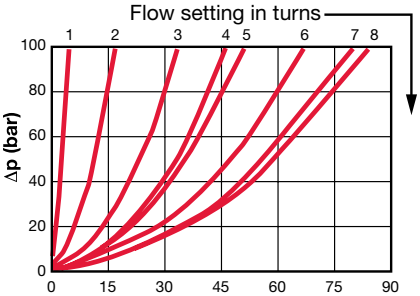

Size 16

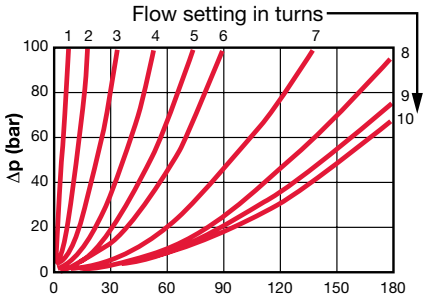

Size 20, 25, 30

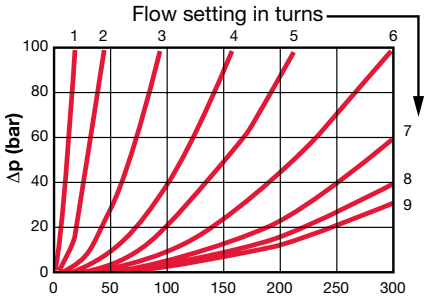

Flow Direction: B to A / Free Flow Through Check Valve

DRV-06-01.X to DRV-16-01.X

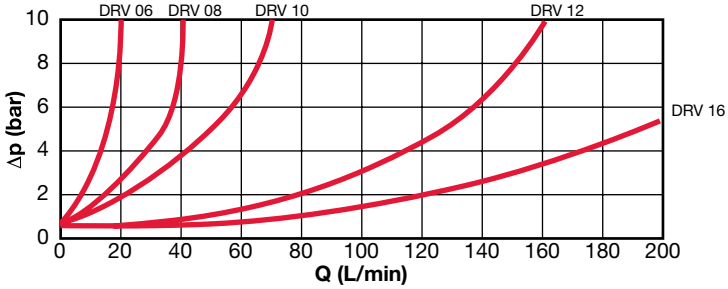

DRV-20-01.X to DRV-40-01.X

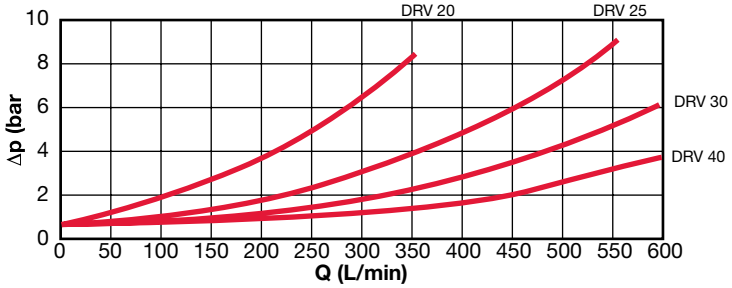

DRVP-06-01.X to DRVP-40-01.X

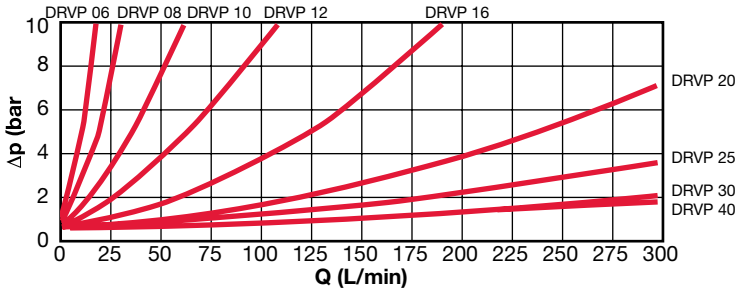

Pressure Drop curves were established by using mineral oil with kinematic viscosity 335 SUS at 86°F / 30°C

Dimensions
DRV Series

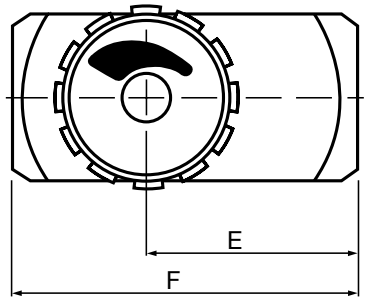

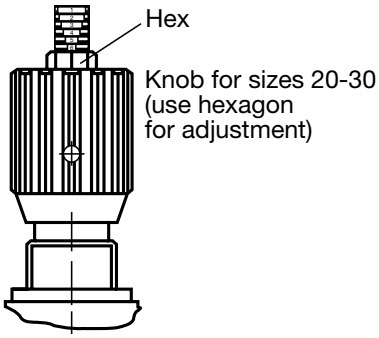

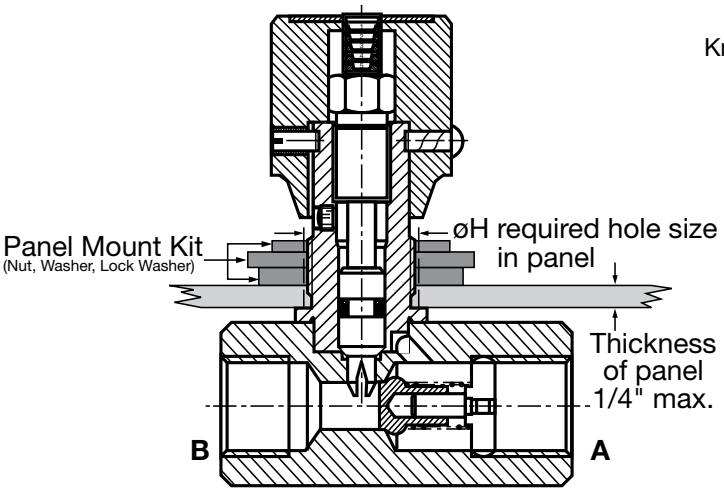

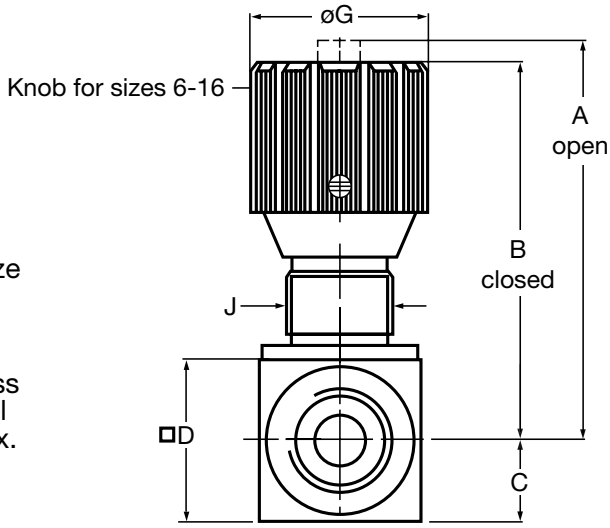

Model Code	Port Size NPTF	Port Size SAE	A	B	C	D	E	F	øG	øH	J*	Hex	Weight
DRV-06	1/8”	5/16-24UNF (SAE-2)	2.17 (55)	1.97 (50)	0.31 (8)	0.63 (16)	1.02 (26)	1.77 (45)	0.94 (24)	0.51 (13)	Pg 7 thread	–	0.29 (0.13)
DRV-08	1/4”	7/16-20UNF (SAE-4)	2.84 (72)	2.56 (65)	0.49 (12.5)	0.98 (25)	1.32 (33.5)	2.17 (55)	1.14 (29)	0.75 (19)	Pg 11 thread	–	0.66 (0.30)
DRV-10	3/8”	9/16-18UNF (SAE-6)	2.91 (74)	2.64 (67)	0.59 (15)	1.18 (30)	1.61 (41)	2.56 (65)	1.14 (29)	0.75 (19)	Pg 11 thread	–	0.99 (0.45)
DRV-12	1/2”	3/4-16UNF (SAE-8)	3.62 (92)	3.23 (82)	0.69 (17.5)	1.38 (35)	1.73 (44)	2.87 (73)	1.50 (38)	0.91 (23)	Pg 16 thread	–	1.76 (0.80)
DRV-16	3/4”	1 1/16-12UN (SAE-12)	4.17 (106)	3.78 (96)	0.89 (22.5)	1.77 (45)	2.24 (57)	3.46 (88)	1.50 (38)	0.91 (23)	Pg 16 thread	–	2.87 (1.30)
DRV-20	1”	1 5/16-12UN (SAE-16)	5.71 (145)	5.04 (128)	0.98 (25)	1.97 (50)	3.03 (77)	5.00 (127)	1.93 (49)	1.50 (38)	Pg 29 thread	3/4 (19)	5.29 (2.40)
DRV-25	1 1/4”	1 5/8-12UN (SAE-20)	5.91 (150)	5.24 (133)	1.18 (30)	2.36 (60)	3.66 (93)	5.63 (143)	1.93 (49)	1.50 (38)	Pg 29 thread	3/4 (19)	7.72 (3.50)
DRV-30	1 1/2”	1 7/8-12UN (SAE-24)	6.10 (155)	5.43 (138)	1.38 (35)	2.76 (70)	4.25 (108)	5.63 (143)	1.93 (49)	1.50 (38)	Pg 29 thread	3/4 (19)	10.14 (4.60)

*Pg style thread per DIN 40430
Notes:
1. Dimensions are in inches (mm) and lbs (kg).
2. Dimensions are for general information only, all critical dimensions should be verified by requesting a certified print.

Panel Mount Kits

Size	Model Code	Part Number
6	Kit Panel Mount DV06	00705300
8/10	Kit Panel Mount DV08	00705310
12/16	Kit Panel Mount DV12	00705302

Dimensions
DRVP Series

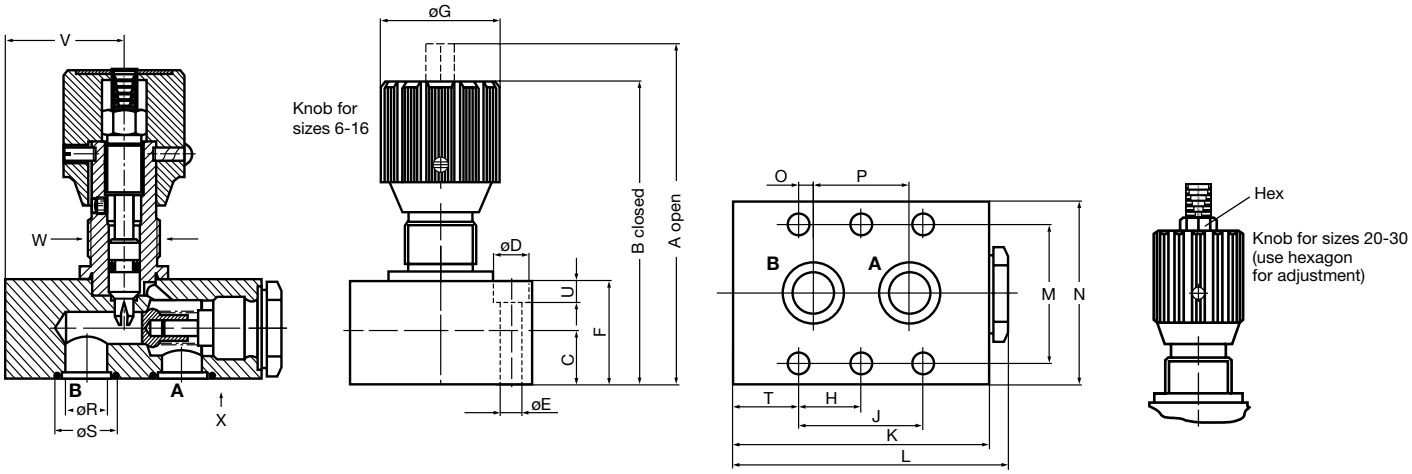

Model Code	Nominal Size	A	B	C	øD	øE	F	øG	H*	J	K	L
DRVP-06	1/8”	2.48 (63)	2.28 (58)	0.31 (8)	0.43 (11)	0.26 (6.6)	0.63 (16)	0.94 (24)	–	7.48 (19)	1.63 (41.5)	1.81 (46)
DRVP-08	1/4”	3.11 (79)	2.83 (72)	0.39 (10)	0.43 (11)	0.26 (6.6)	0.79 (20)	1.14 (29)	–	1.378 (35)	2.50 (63.5)	2.64 (67)
DRVP-10	3/8”	3.31 (84)	3.03 (77)	0.49 (12.5)	0.43 (11)	0.26 (6.6)	0.98 (25)	1.14 (29)	–	1.319 (33.5)	2.76 (70)	2.91 (74)
DRVP-12	1/2”	4.17 (106)	3.78 (96)	0.63 (16)	0.43 (11)	0.26 (6.6)	1.26 (32)	1.50 (38)	–	1.496 (38)	3.15 (80)	3.33 (84.5)
DRVP-16	3/4”	5.04 (128)	4.65 (118)	0.89 (22.5)	0.55 (14)	0.35 (9)	1.77 (45)	1.50 (38)	1.496 (38)	2.992 (76)	4.09 (104)	4.31 (109.5)
DRVP-20	1”	6.69 (170)	6.02 (153)	0.98 (25)	0.55 (14)	0.35 (9)	1.97 (50)	1.93 (49)	1.870 (47.5)	3.740 (95)	5.00 (127)	5.24 (133)
DRVP-25	1 1/4”	6.89 (175)	6.22 (158)	1.08 (27.5)	0.71 (18)	0.45 (11.5)	2.16 (55)	1.93 (49)	2.362 (60)	4.744 (120.5)	6.50 (165)	6.77 (172)
DRVP-30	1 1/2”	7.68 (195)	7.01 (178)	1.48 (37.5)	0.79 (20)	0.55 (14)	2.95 (75)	1.93 (49)	2.815 (71.5)	5.630 (143)	7.32 (186)	7.72 (196)

Model Code	Nominal Size	M	N	O	P	øR	øS	T	U	V	W**	Hex	Weight
DRVP-06	1/8”	1.122 (28.5)	1.63 (41.5)	0.63 (1.6)	0.630 (16)	0.20 (5)	0.382 (9.7)	0.252 (6.4)	0.28 (7)	0.53 (13.5)	Pg 7 thread	–	0.57 (0.26)
DRVP-08	1/4”	1.319 (33.5)	1.81 (46)	0.189 (4.8)	1.004 (25.5)	0.28 (7)	0.500 (12.7)	0.559 (14.2)	0.28 (7)	1.22 (31)	Pg 11 thread	–	1.10 (0.50)
DRVP-10	3/8”	1.496 (38)	2.01 (51)	0.157 (4)	1.004 (25.5)	0.39 (10)	0.614 (15.6)	0.709 (18)	0.28 (7)	1.16 (29.5)	Pg 11 thread	–	1.76 (0.80)
DRVP-12	1/2”	1.752 (44.5)	2.26 (57.5)	0.157 (4)	1.181 (30)	0.51 (13)	0.732 (18.6)	0.827 (21)	0.28 (7)	1.44 (36.5)	Pg 16 thread	–	2.42 (1.10)
DRVP-16	3/4”	2.126 (54)	2.76 (70)	0.433 (11)	2.126 (54)	0.67 (17)	0.965 (24.5)	0.551 (14)	0.35 (9)	1.93 (49)	Pg 16 thread	–	5.51 (2.50)
DRVP-20	1”	2.362 (60)	3.01 (76.5)	0.748 (19)	2.244 (57)	0.87 (22)	1.201 (30.5)	0.630 (16)	0.35 (9)	1.93 (49)	Pg 29 thread	3/4 (19)	8.60 (3.90)
DRVP-25	1 1/4”	2.992 (76)	3.94 (100)	0.811 (20.6)	3.130 (79.5)	1.12 (28.5)	1.472 (37.4)	0.591 (15)	0.43 (11)	3.03 (77)	Pg 29 thread	3/4 (19)	14.77 (6.70)
DRVP-30	1 1/2”	3.622 (92)	4.53 (115)	0.937 (23.8)	3.740 (95)	1.38 (35)	1.709 (43.4)	0.591 (15)	0.51 (13)	3.35 (85)	Pg 29 thread	3/4 (19)	24.25 (11.0)

*Only 4 mounting holes are used on sizes 06, 08, 10, & 12
**Pg style thread per DIN 40430
Notes:
1. Dimensions are in inches (mm) and lbs (kg).
2. Dimensions are for general information only, all critical dimensions should be verified by requesting a certified print.

SRVR Series

Pressure Compensated Flow Control Valves

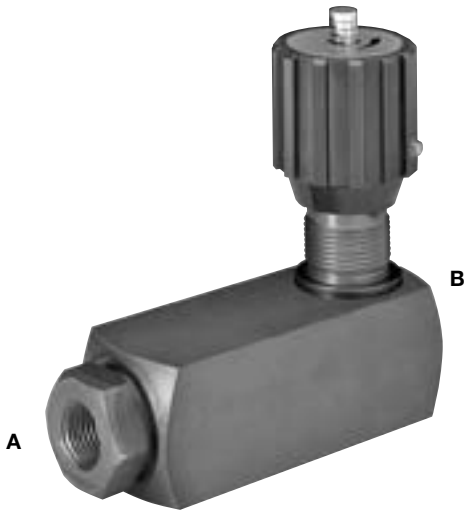

Specifications

- 4 sizes, 1/4” - 3/4”
- Working Pressure:
  Inlet: 102 psi min. / 3045 psi max.
  Outlet: 0 psi min. / 2944 psi max.
- Flows to 24 gpm
- NPTF Connections
- Carbon Steel Housing
- FPM *(Fluoroelastomer)* O-Rings *(standard)*
- Color coded spindle for accurate flow control
- Provision for panel mounting
- Unique safety spindle design
- Temperature Range: -4˚ to 212˚F at full pressure
- Viscosity Range: 13 SUS min. / 1781 SUS max.

Hydraulic Symbol

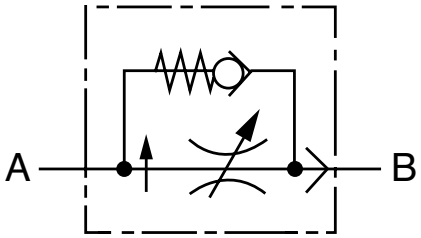

Model Code

SRVR - 08 - 01 .X / 5 - S

Pressure Compensated Flow Control Valve
SRVR = Flow Control Valve *(with internal check valve)*

Nominal Size

		NPTF Only Pipe Size	Pipe OD	BSP
08	=	1/4”	0.540”	G1/4
10	=	3/8”	0.675”	G3/8
12	=	1/2”	0.840”	G1/2
16	=	3/4”	1.050”	G3/4

Housing Material
01 = Carbon Steel

Modification Number

Port Configuration
0 = BSPP to DIN 3852, Part 2 -X
5 = NPTF (ANSI B1.20.3)

Supplementary Details
S = Panel Mounting Kit

Pressure Drop Curves

Flow Direction: A to B / Throttled Flow

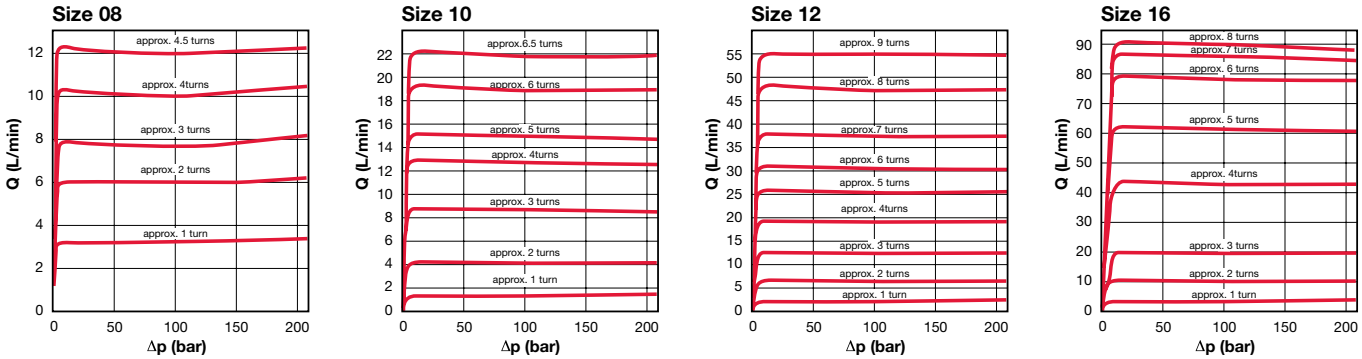

Flow Direction: B to A / Free Flow Through Check Valve

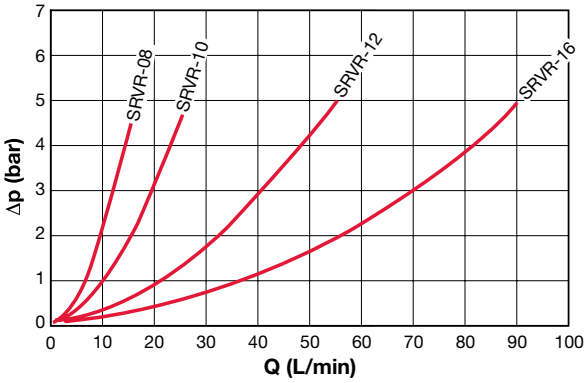

Dimensions

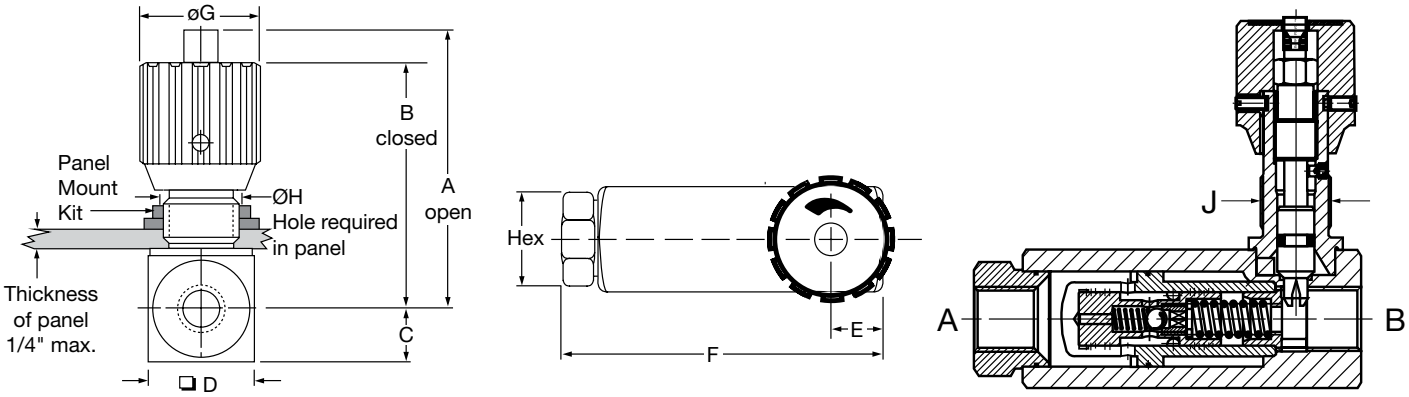

Model Code	Size	A	B	C	D	E	F	Ø G	ØH	J* thread	Hex	Weight
SRVR-08	1/4" NPTF	2.91 (74)	2.64 (67)	0.59 (15)	1.18 (30)	0.69 (17.5)	3.62 (92)	1.14 (29)	0.75 (19)	Pg 11	0.94 (24)	1.3 (0.6)
SRVR-10	3/8" NPTF	3.62 (92)	3.23 (82)	0.69 (17.5)	1.38 (35)	0.71 (18)	4.13 (105)	1.50 (38)	0.91 (23)	Pg 16	1.06 (27)	2.0 (0.9)
SRVR-12	1/2" NPTF	4.17 (106)	3.78 (96)	0.89 (22.5)	1.77 (45)	0.83 (21)	4.92 (125)	1.50 (38)	0.91 (23)	Pg 16	1.26 (32)	3.8 (1.7)
SRVR-16	3/4" NPTF	4.27 (108.5)	3.88 (98.5)	0.98 (25)	1.97 (50)	1.02 (26)	5.51 (140)	1.50 (38)	0.91 (23)	Pg 16	1.61 (41)	4.9 (2.2)

*Pg style thread per DIN 40430

Notes:

1. Dimensions are in inches (mm) and lbs (kg).
2. Dimensions are for general information only, all critical dimensions should be verified by requesting a certified print.

Panel Mount Kits

Size	Model Code	Part Number
08	Kit Panel Mount DV08	00705310
10/12/16	Kit Panel Mount DV12	00705302

RV & RVP Series

Check Valves

RV Series
Inline Mounting

RVP Series
Manifold Mounting

Specifications

- 5000 psi operating pressure
- 9 Sizes, 1/8” - 2”
- NPT or SAE O-Ring connections and manifold mounting
- Flows to 150 gpm
- Carbon Steel Housing
- FPM *(Fluoroelastomer)* O-Rings *(for RVP series)*
- Metal to metal seal design for poppet
- Hardened and ground steel poppet
- 3 Cracking Pressures: 7 psi *(standard)*, 25 psi and 65 psi *(optional)*
- Temperature Range: -4° to 212°F at full pressure

Hydraulic Symbol

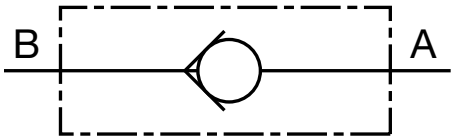

Model Code

RV - 06 - 01 .X / 5 - 25

Check Valve

RV	=	Inline Mounting
RVP	=	Manifold Mounting

Nominal Sizes

Nom Size (RV + RVP)		SAE *(RV Only)* Tube Size	Thread Size	NPTF *(RV Only)* Pipe Size	Pipe OD	BSPP *(RV Only)* Thread Size
06	=	-2	5/16-24 UNF	1/8”	0.405”	G1/8
08	=	-4	7/16-20 UNF	1/4”	0.540”	G1/4
10	=	-6	9/16-18 UNF	3/8”	0.675”	G3/8
12	=	-8	3/4-16 UNF	1/2”	0.840”	G1/2
16	=	-12	1-1/16-12 UN	3/4”	1.050’	G3/4
20	=	-16	1-5/16-12 UN	1”	1.315”	G1
25	=	-20	1-5/8-12 UN	1-1/4”	1.660”	G1 1/4
30	=	-24	1-7/8-12 UN	1-1/2”	1.900”	G1 1/2
40	=	-32	2-1/2-12 UN	2”	2.375”	G2

Housing Material

01	=	Carbon Steel

Modification Number

Port Configuration

(omit)	=	RVP only
0	=	BSPP to DIN 3852, Part 2-X
5	=	NPTF - ANSI/ASME 1.20.3 Taper Pipe Thread
12	=	SAE - SAEJ1926 Ports with ISO 725 Threads and O-Ring Sealing

Cracking Pressure

(omit)	=	7 psi *(standard)*
25	=	25 psi
65	=	65 psi

Note: Not recommended for high-cycle applications!

Pressure Drop Curves

Flow Direction: B to A / Free flow through check valve *(A to B is completely blocked)*

RV-06... to RV-16...

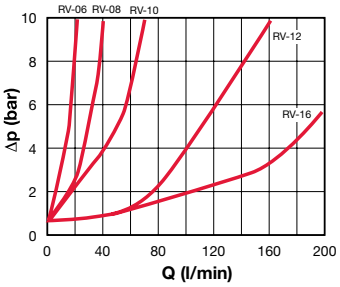

RV-20... to RV-40...

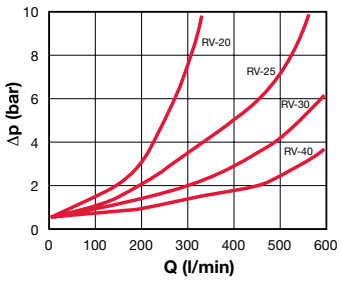

RVP-06... to RVP-16...

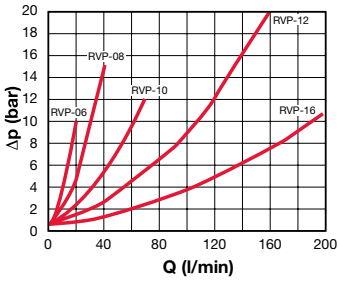

RVP-20... to RVP-40...

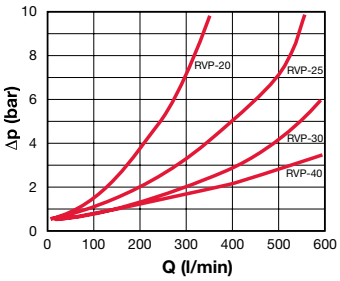

Pressure Drop curves were established by using mineral oil with kinematic viscosity 335 SUS at 86°F / 30°C

Dimensions
RV Inline Check Valves

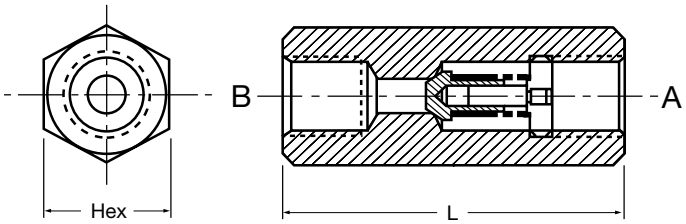

Model Code	Port Size NPT	Port Size SAE	Hex	L	Weight
RV-06	1/8”	5/16-24 UNF	11/16 (17)	1.77 (45)	0.22 (0.1)
RV-08	1/4”	7/16-20 UNF	3/4 (19)	2.17 (55)	0.44 (0.2)
RV-10	3/8”	9/16-18 UNF	1 (24)	2.60 (65)	0.44 (0.2)
RV-12	1/2”	3/4-16 UNF	1 1/4 (30)	2.87 (73)	0.66 (0.3)
RV-16	3/4”	1 1/16-12 UN	1 7/16 (36)	3.46 (88)	1.1 (0.5)
RV-20	1”	1 5/16-12 UN	1 13/16 (46)	5.00 (127)	2.4 (1.1)
RV-25	1-1/4”	1 5/8-12 UN	2 3/8 (60)	5.63 (143)	4.0 (1.8)
RV-30	1-1/2”	1 7/8-12 UN	2 9/16 (65)	5.63 (143)	5.7 (2.6)
RV-40	2”	2 1/2-12 UN	3 3/16 (80)	6.50 (165)	9.7 (4.4)

Dimensions
RVP Manifold Mounted Check Valves

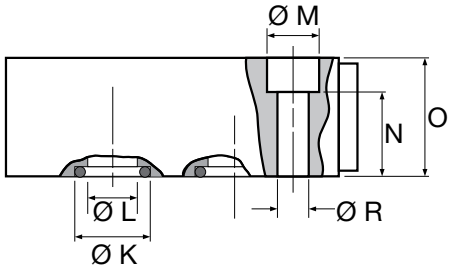

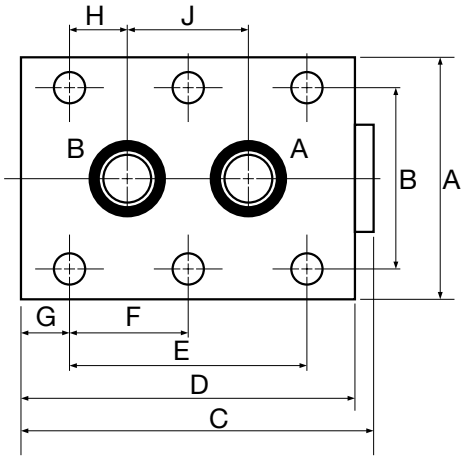

RVP Manifold Mounted Check Valves

Model Code	A	B	C	D	E	F*	G	H	J	K	L	M	N	O	R	Wt.
RVP-06	1.63 (41.5)	1.12 (28.5)	1.31 (46)	1.63 (41.5)	0.75 (19)	–	0.25 (6.4)	0.06 (1.6)	0.63 (16)	0.38 (9.7)	0.2 (5)	0.43 (11)	0.35 (9)	0.63 (16)	0.26 (6.6)	0.4 (0.2)
RVP-08	1.81 (46)	1.32 (33.5)	2.64 (67)	2.5 (63.5)	1.38 (35)	–	0.56 (14.2)	0.19 (4.8)	1.00 (25.5)	0.50 (12.7)	0.28 (7)	0.43 (11)	0.51 (13)	0.79 (20)	0.26 (6.6)	0.9 (0.4)
RVP-10	2.01 (51)	1.50 (38)	2.81 (74)	2.76 (70)	1.32 (33.5)	–	0.71 (18)	0.16 (4)	1.00 (25.5)	0.61 (15.6)	0.39 (10)	0.43 (11)	0.71 (18)	0.98 (25)	0.26 (6.6)	1.1 (0.5)
RVP-12	2.26 (57.5)	1.75 (44.5)	3.33 (84.5)	3.15 (80)	1.50 (38)	–	0.83 (21)	0.16 (4)	1.18 (30)	0.73 (18.6)	0.51 (13)	0.43 (11)	0.98 (25)	1.26 (32)	0.26 (6.6)	2.2 (1.0)
RVP-16	2.76 (70)	2.13 (54)	4.31 (109)	4.09 (104)	2.99 (76)	1.50 (38)	0.55 (14)	0.43 (11)	2.13 (54)	0.96 (24.5)	0.67 (17)	0.55 (14)	1.42 (36)	1.77 (45)	0.35 (9)	4.6 (2.1)
RVP-20	3.01 (76.5)	2.36 (60)	5.24 (133)	5.00 (127)	3.74 (95)	1.87 (47.5)	0.63 (16)	0.75 (19)	2.24 (57)	1.20 (30.5)	0.87 (22)	0.55 (14)	1.61 (41)	1.97 (50)	0.35 (9)	7.3 (3.3)
RVP-25	3.94 (100)	2.99 (76)	6.77 (172)	6.50 (165)	4.74 (120.5)	2.36 (60)	0.59 (15)	0.81 (20.6)	3.13 (79.5)	1.47 (37.4)	1.12 (28)	0.71 (18)	1.73 (44)	2.17 (55)	0.45 (11.5)	12.8 (5.8)
RVP-30	4.53 (115)	3.62 (92)	7.72 (196)	7.32 (186)	5.63 (143)	2.81 (71.5)	0.59 (15)	0.94 (23.8)	3.74 (95)	1.71 (43.4)	1.38 (35)	0.79 (20)	2.44 (62)	2.95 (75)	0.55 (14)	22.7 (10.3)
RVP-40	5.51 (140)	4.37 (111)	7.91 (201)	7.56 (192)	5.26 (133.5)	2.64 (67)	0.63 (16)	1.00 (25.5)	3.50 (89)	2.25 (57.2)	1.85 (47)	0.79 (20)	3.43 (87)	3.94 (100)	0.55 (14)	39.5 (17.9)

*Only 4 mounting holes are used on sizes 06, 08, 10, & 12

Notes:

1. Dimensions are in inches (mm) and lbs (kg).
2. Dimensions are for general information only, all critical dimensions should be verified by requesting a certified print.

DV, DRV, & RV Series

Stainless Steel Flow Control Valves - Available with BSPP Ports

DV Series
Inline Mounting
Needle Valves

DRV Series
Inline Mounting
Flow Control Valves

RV Series
Inline Mounting
Check valves

Model Code	Part Number	Dimensions
RV-06-30.X/0	00705859	Same as Standard Product
RV-08-30.X/0	00705861	
RV-10-30.X/0	00705863	
RV-12-30.X/0	00705865	
RV-16-30.X/0	00705867	
RV-20-30.X/0	00705869	
RV-25-30.X/0	00705895	
RV-30-30.X/0	00707521	
DV-06-30.X/0	00705134	Same as Standard Product
DV-08-30.X/0	00705142	
DV-10-30.X/0	00705150	
DV-12-30.X/0	00705158	
DV-16-30.X/0	00705166	
DV-20-30.X/0	00705174	
DV-25-30.X/0	00707424	
DV-30-30.X/0	00705295	
DRV-06-30.X/0	00705634	Same as Standard Product
DRV-08-30.X/0	00705642	
DRV-10-30.X/0	00705650	
DRV-12-30.X/0	00705658	
DRV-16-30.X/0	00705666	
DRV-20-30.X/0	00705674	

RB Series

Hose Break Valves

RB...
Housing Valves

RBE...
Cartridge Valves

Hydraulic Symbol

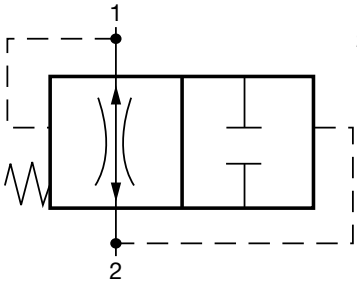

1-2 Free Flow
2-1 Operating Direction;
Valve closes if flow exceeds adjusted flow rate.

Model Code

RB E - SAE1-1/16-12 - X - 120L/MIN

Hose Break Valve

Housing Type
Refer to "code" column below

Size of Connection
Refer to "Size of Connection" below

Modification Number
X = Latest Revision

Closing Flow Rate
XXXL/MIN = Standard
Max. closing flow rate listed below in l/min

XXXGPM = Factory Set
Customer specifies closing flow rate in gpm

Description

HYDAC Hose Break Valves eliminate uncontrolled movements of the actuator in case of line rupture. They are commonly applied with dead weight cylinders.

These valves are volume limiting flat seat valves.

At normal flow, the poppet is held open by a spring with enough force to counteract the force on the poppet created by the flow.

When the supply line is ruptured, the flow from 2 to 1 exceeds the specified flow rate, the P across the poppet creates a force greater than the spring force and closes the valve. This closing flow rate is adjustable. The valve opens automatically by pressurizing connection 1.

Depending on the pressure P, the leakage rate through the valve is approximately 0 to 6 in^3 / min. If this is excessive, the valve threads can be sealed and made leak-free.

The valves are installed between actuators and possible line breakage points.

A cartridge-type valve can be installed into an actuator port.

A housing-type valve can be installed close to the actuator or even directly into the actuator itself.

Type and Size Codes

Code	Housing Type		Connection 1	Connection 2	Size of Connections Dependent on Desired Closing Flow Rate *(see below)*		
E	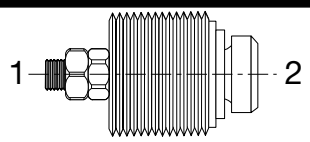	Cartridge Only	–	–	SAE 9/16-18	SAE 3/4-16	SAE 1 1/16-12
XB	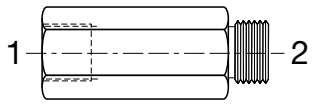	Cartridge Valve in Housings	SAE Straight Thread Port	SAE Straight Thread Stud End	SAE 9/16-18	SAE 3/4-16	SAE 1 1/16-12
XB	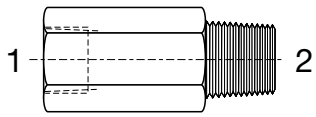		NPT Port	NPT Male Connector	NPT 3/8	–	NPT 1
XX	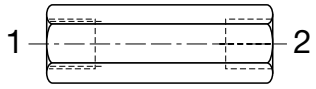		SAE Straight Thread Port	SAE Straight Thread Port	SAE 9/16-18		SAE 1 1/16-12
CC	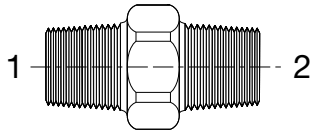		NPT Male Connector	NPT Male Connector	–	NPT 3/4	–

Closing Flow Rate (min - max) *(from 2 to 1)*	**GPM** **L/min**	1-4 4-15	1.6-12 6-45	6.5-32 25-120
To avoid the activation of hose break valves on flow surges, the closing flow rate should be at least 20% above the normal flow rate.	Valves are shipped with maximum closing flow setting. Closing flow can be adjusted according to the curve on the next page. If closing flow must be set by factory, please specify when ordering.			

PN#02080105 / 01.17 / ACC1603-1753

Adjustment Curves for Closing Flow Rate

The closing flow rate is dependent on the dimensions “H”.

After loosening the lock nut, set the GAP to dimension “H” with a thickness gauge.

The lock nut must be tightened after adjustment.

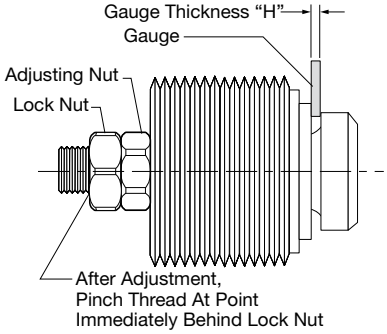

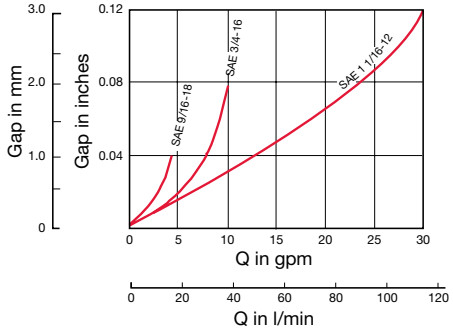

The adjustment curves are valid for cartridge RBE...and for all housing valves RB... in accordance with “Type and Size Codes” charts on previous page. For model RB... the cartridge must be removed from the housing for adjustment.

See special tool for installation and removal on page A5-19.

Dimensions

Cartridges

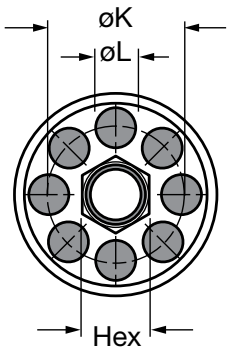

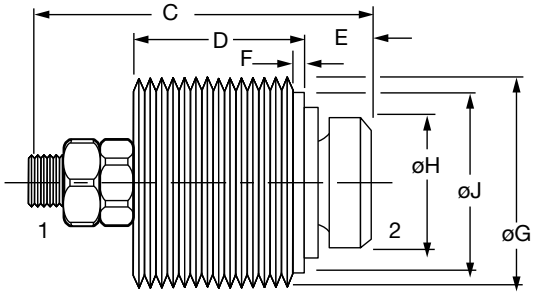

Valve Type	C	D	E	F	øG	øH	øJ	øK	øL	Hex
RBE-SAE 9/16	0.866 (22)	0.453 (11.5)	0.138 (3.5)	0.13 (3)	9/16-18UNF-2B	0.374 (9.5)	0.460 (11.7)	0.315 (8)	0.098 (2.5)	0.197 (5)
RBE-SAE 3/4	1.063 (27)	0.531 (13.5)	0.197 (5)	0.14 (3.5)	3/4-16UNF-2B	0.472 (12)	0.640 (16.3)	0.394 (10)	0.138 (3.5)	0.217 (5.5)
RBE-SAE 1 1/16	1.614 (41)	0.925 (23.5)	0.256 (6.5)	0.17 (4)	1 1/16-12UNF-2B	0.709 (18)	0.930 (23.6)	0.630 (16)	0.256 (6.5)	0.276 (7)

Notes:
1. Dimensions are in inches (mm) and lbs (kg).
2. Dimensions are for general information only, all critical dimensions should be verified by requesting a certified print.

Dimensions

RBXX-SAE 1-1/16-12

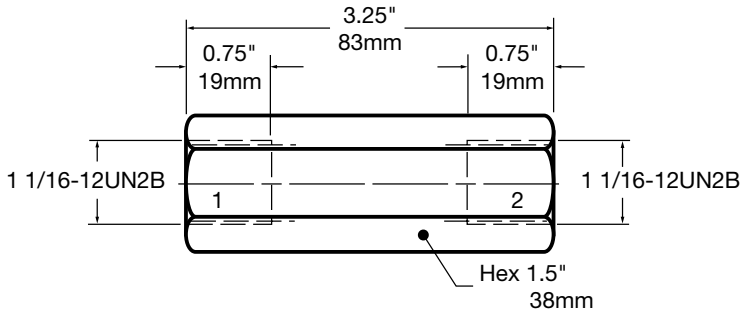

RBCC-NPT 3/4 Housing Valve

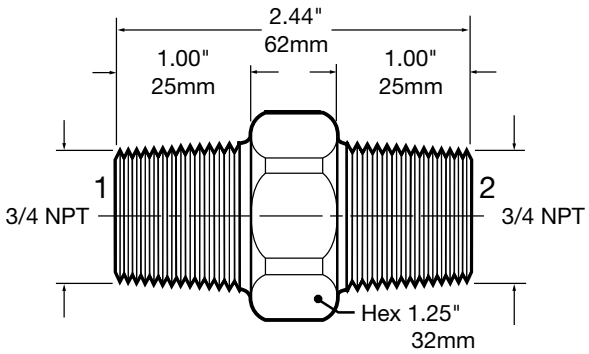

Dimensions

RBXB-... SAE

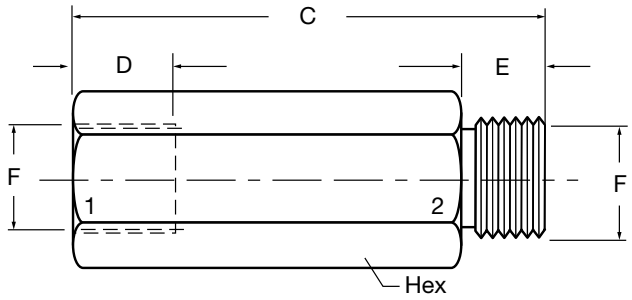

RBXB-... NPT

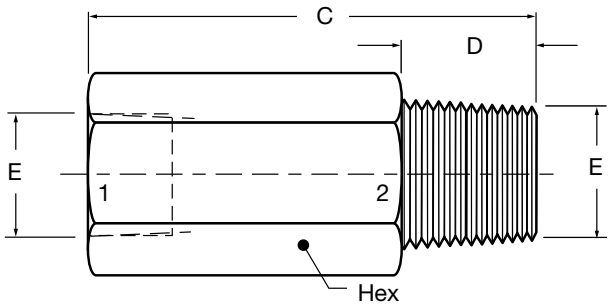

Housing Type	C	D	E	F	Hex
RBXB-SAE 9/16-18	2.13 (54)	0.50 (13)	0.39 (10)	9/16-18UNF-2B	0.75 (19)
RBXB-SAE 3/4-16	2.38 (60)	0.56 (14)	0.44 (11)	3/4-16UNF-2B	1.00 (25)
RBXB-SAE 1 1/16-12	3.25 (83)	0.75 (19)	0.59 (15)	1 1/16-12UNF-2B	1.50 (38)
RBXB-NPT 3/8	2.09 (53)	0.59 (15)	3/8 NPT		0.88 (22)
RBXB-NPT 1/2	2.75 (70)	0.78 (20)	1/2 NPT		1.00 (25)
RBXB-NPT 1	3.31 (84)	0.98 (25)	1 NPT		1.75 (44)

SAE Cavity

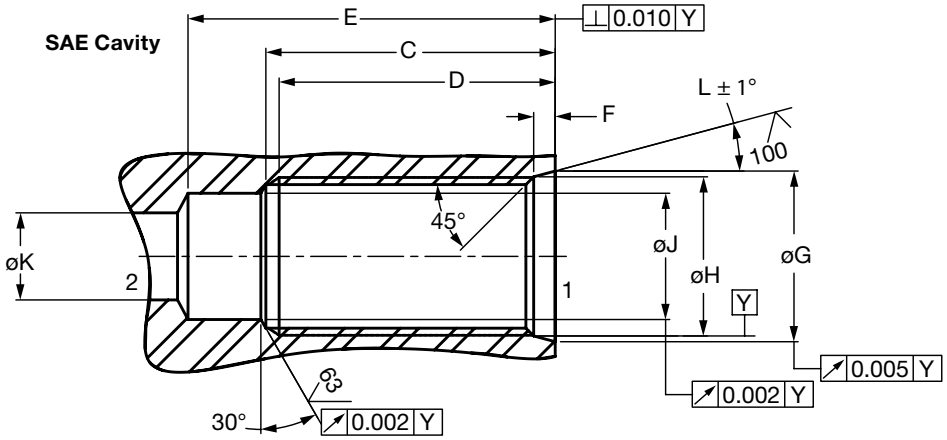

Housing Type	C	D	E	F	øG	øH	øJ	øK Min	L
RBE-SAE 9/16	1.250	1.188	1.56	0.106	0.618	9/16"-18UNF-2B	0.435	0.297	12°
RBE-SAE 3/4	1.375	1.312	1.69	0.106	0.813	3/4"-16UNF-2B	0.600	0.422	15°
RBE-SAE 1 1/16	2.000	1.938	2.44	0.138	1.150	1-1/16"-12UN-2B	0.890	0.609	15°

Notes:
1. Dimensions are in inches (mm) and lbs (kg).
2. Dimensions are for general information only, all critical dimensions should be verified by requesting a certified print.

Nominal Flow Curves

Flow rate is dependent on operating setting "H". See "Adjusting Curves for Closing Flow Rates - Settings". Curves are valid for Cartridges RBE and Housing RB... in accordance with charts on previous page. Limit Lines indicate the maximum closing flow rates. These rates cannot be exceeded. Curves were established at 150 SUS.

RBE-SAE 9/16 - 18

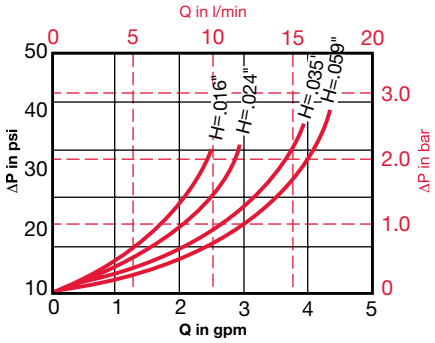

RBE-SAE 3/4 - 16

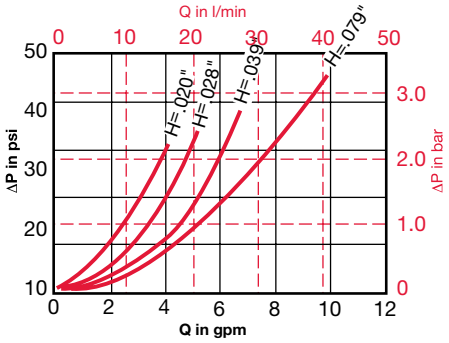

RBE-SAE 1-1/16 - 12

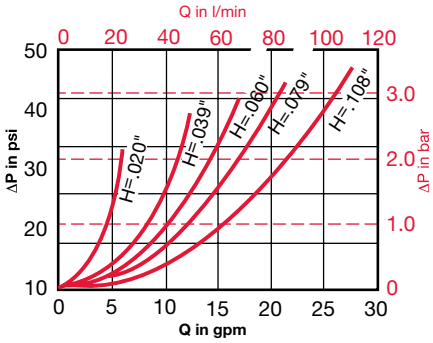

Engineering Data

Design		Flat Seat Valve
Mounting Method	RBE	Cartridge
	RB..	Housing Valve for In-line Installation
Connection		Refer to chart on page A5-16
Mounting Position		Optional
Direction of Flow	1 to 2	Free Flow
	2 to 1	Free Flow; valve automatically closes if flow exceeds preset level
Fluid		General purpose hydraulic oil. Consult HYDAC for other media
Operating Pressure Ratings	P Max:	5000 psi (350 bar)
	P Min:	145 psi / 10 bar
Fluid Temperature Range		-4° to 176°F (-20° to 80°C)
Material		Carbon Steel

Weights

RBE	lbs.
SAE 9/16-18	0.02
SAE 3/4-16	0.04
SAE 1 1/16-12	0.13
RBXB	**lbs.**
SAE 9/16-18 3/8 NPTF	0.17
SAE 3/4-16 1/2 NPTF	0.24
SAE 1 1/16-12 1 NPTF	0.88
RBXX	**lbs.**
SAE 1 1/16-12	0.92
RBCC	**lbs.**
3/4 NPTF	0.37

Recommendations

Hose break valves, type RBE must only be used to safeguard users in the event of hose breaks. They must not be used as switching valves for repeated closing actions.

If closing actions occur during normal operation, the setting of the hose break valve is not suitable for the operating parameters of the system. The hose break valve must be replaced by a new one with a modified setting.

In order to prevent hose break valves reacting to flow rate fluctuations inherent in the system, e.g. due to switching of directional valves, the actuating flow rate should be at least 20% above the normal maximum system flow rate. If high viscosity fluctuations occur, the valves must be set to a higher actuating flow rate to ensure trouble-free operation at high viscosity. However, the valves must still react at a low viscosity. Since this range depends largely on the system, whose operational flow rate fluctuations can also depend on viscosity, the appropriate setting for the valve is best determined on site.

Sizing Hose Break Valves

In order for a hose break valve to work properly there must be a difference between the normal operating flow rate (from pump) and the emergency flow rate created by a hose or line break. The emergency flow rate must be significantly higher than the normal operating flow. Why? The hose break valve is designed to only be closed in an emergency situation. These valves should not be cycled (opened and closed) with the system. Cycling the valve and/or excessive vibrations will lead to premature failure of the valve components.

How do you determine the emergency flow rate? You must perform a test with the actual system in a hose break simulation. This test should be run with the minimum load on the cylinder/lift to determine the minimum emergency flow rate for the system. To test, break the line open or open a directional valve and allow gravity to pull down the cylinder/lift. The flow rate measured during this test is the emergency flow rate.

The hose break closing flow rate setting is adjustable and should be set to close at a flow rate between the normal flow rate and the emergency flow rate. The closing flow rate should be set at least 20% higher than the normal flow rate, and should be set at least 20% below the emergency flow rate.

How do you set the closing flow rate for the valve? The gap between the poppet and the valve body is adjustable by means of the lock nut and adjustment nut on the end of the poppet. The larger the gap, the higher the closing flow rate for the valve.

Installation Tools

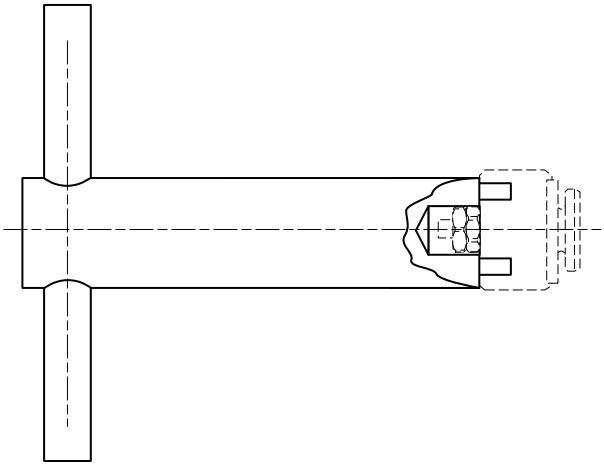

Cartridge Size	Part Number
9/16-18	00161421
3/4-16	00160561
1-1/16-12	00164180

AEV Series

Automatic Air Vent Valves

Description

The HYDAC Air Vent Valve eliminates air bubbles which accumulate in hydraulic systems immediately after start-up or after long periods of shut-down of the system.

The Air Vent Valve remains open until the valve reaches a 45 psi differential pressure.

Pressure must be maintained above 45 psi to keep valve closed.

This type of operation of the HYDAC Air Vent Valve allows for easy start-up of hydraulic systems.

Due to the compact design the Air Vent Valve requires minimum space.

Technical Data

Operating Pressure Range

- P min 43 psi (3 bar)
- P max 8700 psi (600 bar)

Material

- Carbon Steel

Operating Flow Range

- Q min 0.25 gpm (1 l/min)
- Q max 15 gpm (57 l/min)

to achieve higher flow rates, parallel connection is possible

Model Code

AEV - 6 / 5

Part Number

00230223

Mounting

The inlet port is connected to the pressure line and the outlet port should be connected back into the non-pressurized reservoir.

For ventilation of pumps the valve should be mounted adjacent to the pump outlet. For system ventilation the valve should be mounted at the system's highest point.

Mounting Positions

Optional - see figures A and B.
The return line must be connected to reservoir below the minimum oil level.

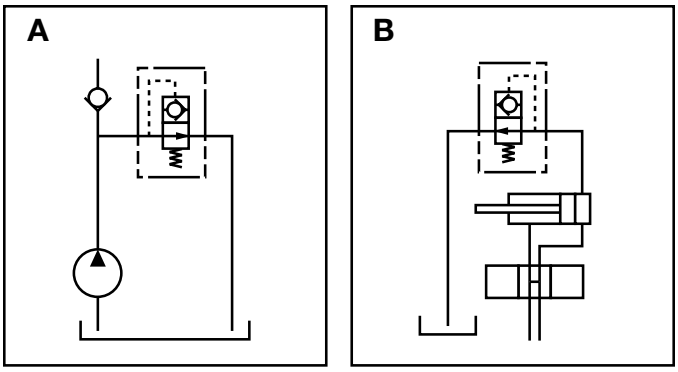

Dimensions

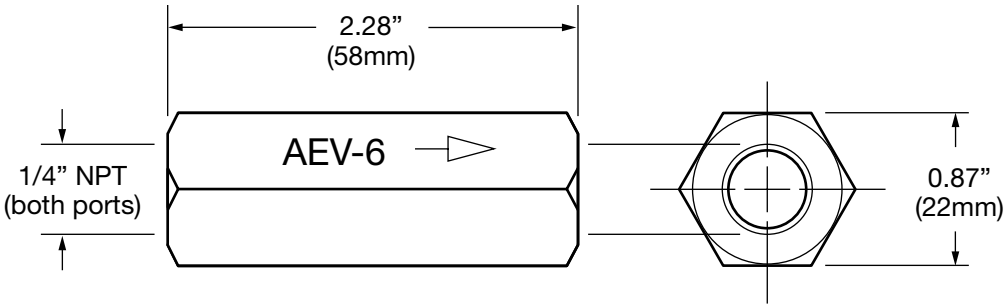

Notes:
1. Dimensions are in inches (mm).
2. Dimensions are for general information only, all critical dimensions should be verified by requesting a certified print.

B Overview of Clamps

OVERVIEW OF CLAMPS

Standard Solutions

HYDAC Manufactures a complete line of hose, tube, and pipe mounting components. For many years, these products have been successfully applied, worldwide. Our standard product offering includes:

DIN 3015 Clamps
HRL, HRS, HRZ, HREL, & HRES Series
Line Sizes from 1/4” to 16” O.D.

Flat Cushion Clamps
HOM Series
Line Sizes from 1/4” to 2” O.D.

Cushion Clamps
CUSH Series
Line Sizes from 1/4” to 3 1/2” O.D.
Mount on standard 1 5/8” x 7/8” unistrut® mounting rail

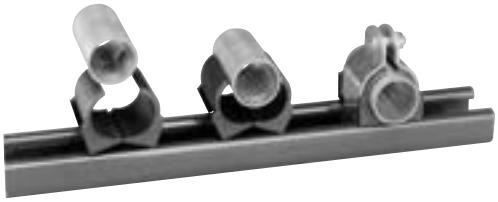

Buegu
HRBGS Series
Line Sizes from 1/4” to 3/4” O.D.

U-Bolt Clamps
HRRBS Series
Line Sizes from 3/4” to 16” O.D.

U-Bolt with Cushion Clamps
HUB Series
Line Sizes from 1/4” to 12” O.D.

Oval Clamps
HROS Series
Line Sizes from 1/4” to 1” O.D.

“P” Style Clamps
HSPN Series
Line Sizes from 1/4” to 3” O.D.

“P” Style Loop Clamps
HSVW & HLVZ Series
Line Sizes from 3/16” to 3-9/16” O.D.

Quick Release Swivel Bolt Clamps
HRGKSM Series
Line Sizes from 1.54” to 17.87” O.D.

Clamp Sample Kit
P/N 00265928

Custom Solutions

HYDAC is also a market leader in providing custom mounting solutions. Our engineers work with yours to develop unique solutions that save time and money by simplifying inventory and installation. From simple modifications of standard product to custom bracketry, we will provide you a successful solution for your application. For more information on custom solutions, please contact product management at **1-877-GO HYDAC.**

Series Strip Clamps

HRRL & HRRLE Series
Line Sizes from 6 to 25.4 mm O.D.

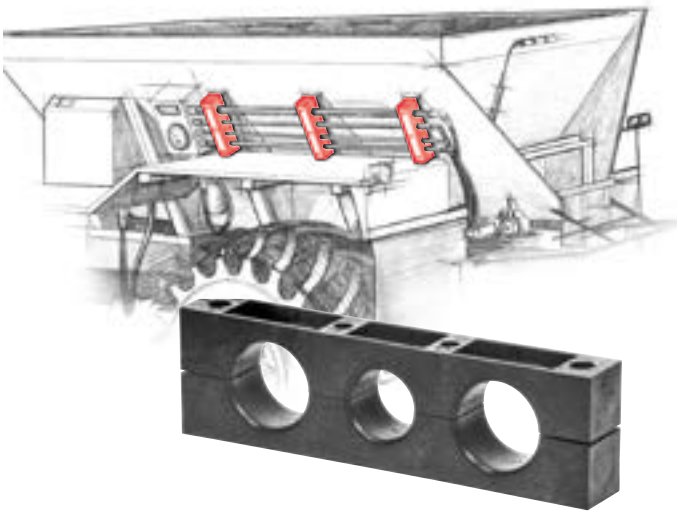

Band Straps

Length Ranges from 187 to 1511 mm

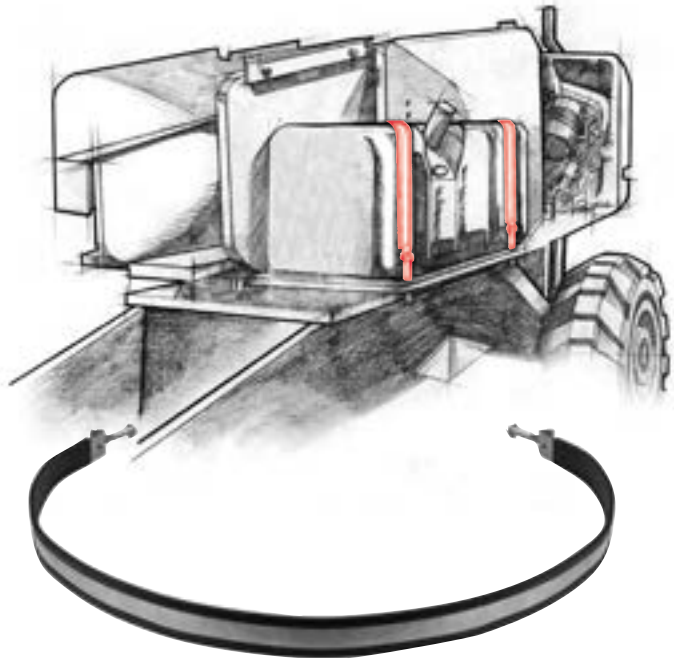

Series Strip Clamp & Custom Brackets

Stacking Series Strip Run

Series Strip Clamp & Custom Mounting Plates

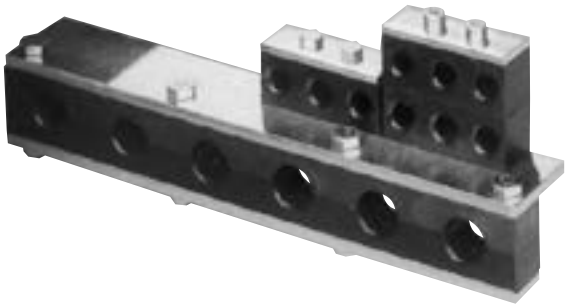

Cylinder / Tube Clamp

OVERVIEW OF CLAMPS

Quick Reference Guide of Clamps

Type		Series	Sizes	Specifications	Page No.
	Standard Duty DIN 3015	HRL HRGL	Available to 2” tube outside diameter	Up to 1500 PSI - no dynamic loads	B1-4
	Heavy Duty DIN 3015	HRS HRGS	Available to 16” nominal pipe size	Greater than 1500 PSI	B1-6
	Twin DIN 3015	HRZ HRGZ	Available to 1-1/4” nominal pipe size	Up to 1500 PSI - no dynamic loads	B1-8
	Standard Duty w/ Rubber Insert	HREL	Available to 2” tube outside diameter	Up to 1500 PSI - no dynamic loads	B1-10
	Heavy Duty w/ Rubber Insert	HRES	Available to 5 1/4” bore diameter	Noise reduction - resistance to axial movement	B1-12
	Flat Cushion Clamps	HOM	Available to 2” bore diameter	Withstands the effect of most oils. Chemical and other cleaning compounds in temperatures from -50° to 275°F	B2-2
	Cushion Clamps	CUSH	Available to 6” bore dia. - fits standard 1 5/8” w/ mounting rail	Withstands the effect of most oils. Chemical and other cleaning compounds in temperatures from -40° to 275°F	B2-3
	Buegu Clamps	HRBGS	Available to 3/8” bore diameter	Stirrup & Weld plate - carbon steel Clamp body - thermoplastic elastomer Temperature (-40° to 125°C)	B2-4
	U-Bolt Clamps	HRRBS	Available to 16” nominal pipe size	Treaded ”U” - zinc plated carbon steel Saddle - polypropylene	B2-6
	U-Bolt w/ Cushion Clamps	HUB	Available to 12” nominal pipe size	U-Bolt - Steel with electro-galvanized finish or 316 stainless steel Cushion - Thermoplastic elastomer, rated from -50° to 275°F *The A4 in the model code denotes 316 stainless steel	B2-7
	Oval Clamps	HROS	Available to 1” tube size	PP - Polypropylene (standard) PA or others may be available -22° to 194°F (-30° to 90°C)	B2-8
	”P” Style Clamps	HSPN HSPW	HSPN available up to 3” HSPW available up to 1-1/8	EPDM cushion steel clamp- steel w/ electroplated finish or 304 stainless steel	B2-9
	”P” Style Loop Clamps	HSVW HLVZ	HSVW available up to 1-3/8” HLVZ available up to 3-9/16”	Galvanized steel PVC coated	B2-10
	Quick Release Swivel Bolt Clamps	HRGKSM	Available up to 20” bore diameter	Zinc plated steel polyethelyne profile stainless steel band strap	B2-11
	Series Strip Clamps	HRRL HRRLE	HRRL bore up to 1” HRRLE bore up to 2.22”	For multiple lines similar to DIN 3015 standards	B3-2
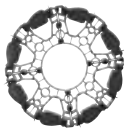	Cable Clamp	HRFLEX	Flexible/modular design	Wind turbine power cable management system	B3-3
	Clamping Band	Band Straps	Diameters up to 20”	Effective for most non-cylindrical shapes many bolt/connectors available	B3-4

B1

DIN 3015 Clamps

HYDAC manufactures a complete line of hose, tube, and pipe mounting components according to the DIN 3015 standard. HYDAC clamps assure a simple, reliable dampening support for lines which absorb shock, dampen vibration, and reduce noise in plumbing systems.

Overview

HYDAC manufactures a complete line of hose, tube, and pipe mounting components according to the DIN 3015 standard. Our clamps assure a simple, reliable dampening support for lines which absorb shock, dampen vibration, and reduce noise in plumbing systems.

HRL Series – Standard Duty

(see pages B1-4 to B1-5)

- Available to 2” tube outside diameter.
- Recommended for systems with less than 1500 PSI operating pressure and no dynamic loads.

HRS – Heavy Duty

(see pages B1-6 to B1-7)

- Available to 16” nominal pipe size
- Recommended for systems with greater than 1500 PSI operating pressure, operations with pressure surges and applications with wide temperature fluctuations.

HRZ – Twin

(see pages B1-8 to B1-9)

- Available to 1-1/4” nominal pipe size
- Recommended for systems with less than 1500 PSI operating pressure and no dynamic loads

HREL – Standard Duty w/ Rubber Insert

(see pages B1-10 to B1-11)

- Available to 2” tube outside diameter
- Recommended for systems with less than 1500 PSI operating pressure and no dynamic loads
- Provide for greater noise reduction and resistance to axial movement

HRES – Heavy Duty w/ Rubber Insert

(see pages B1-12 to B1-13)

- Heavy duty available to 5 1/4” bore diameter
- Provide for greater noise reduction and resistance to axial movement

Bore Styles

Standard duty, heavy duty, and twin series are available with either ribbed bores (standard) or smooth bore (special order). When ordering a smooth bore arrangements or clamp pairs, a “G” is inserted in the code directly after the “HR” i.e. HRGL, HRGS and HRGZ

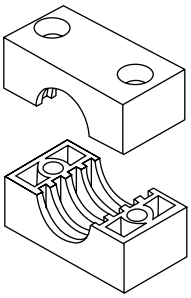

Ribbed Bore
(standard)

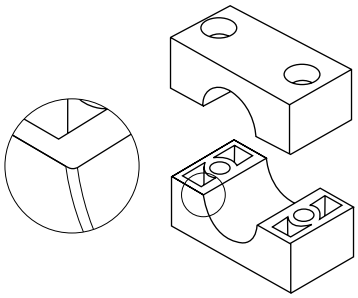

Smooth Bore
smooth surface and chamfered edge prevent chaffing of hose *(special)*

Arrangements

Various arrangements are available in each series.

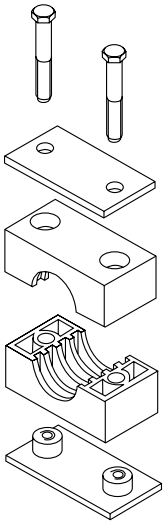

Weld Plate Mounting

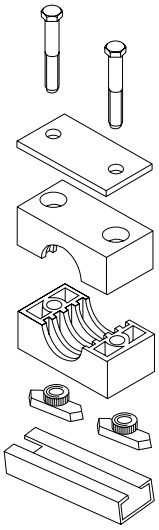

C-rail Mounting

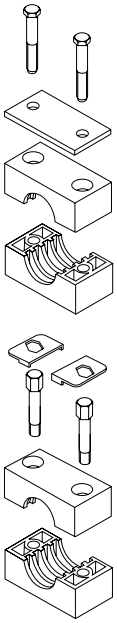

Stacking Modules & Kits

Materials

Metal components are carbon steel *(standard)*. Stainless steel is also available. Metal components to be welded *(weld plates and c-rails)* and heavy duty top plates size 5-8 are phosphate coated, while all other metal components are zinc plated. Clamp pairs are polypropylene *(standard)*. Polyamide and aluminum clamp pairs are also available.

For specifications on these materials, see page B1-3.

Ordering

Clamps can be ordered as complete arrangements, or separate components. See each series for details.

Technical Specifications

Mounting Guidelines

- The first clamp should be mounted directly after the threaded connection or coupling. This protects the connection from vibrations.
- Bends in the line should be clamped on BOTH sides of the bend.
- The line should be clamped directly before and after any inline valves.
- Proper torquing of the clamp bolts is important, and is part of the DIN 3015 Standard

(see the chart below right for torque information)

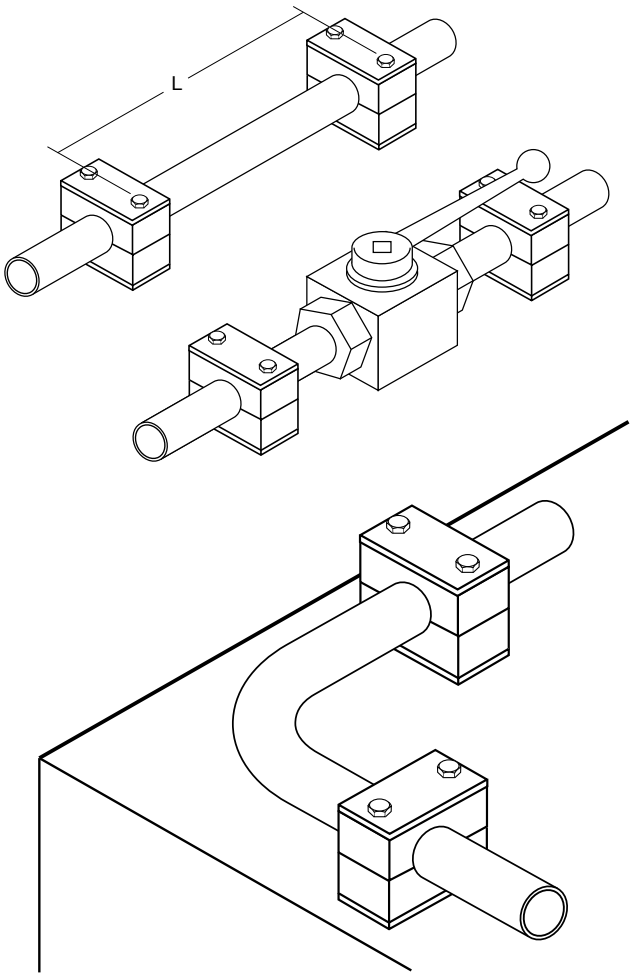

Distance Between Clamps

Pipe Size	Distance (L)	Tube Size	Distance (L)
1/4”	4’	1/16”	3’
1/2”	4’	1/8”	3’
3/4”	5’	1/4”	3’
1”	5’	3/8”	3’
1 1/4”	7’	1/2”	3’
1 1/2”	8’	5/8”	4’
2”	10’	3/4”	4’
2 1/2”	10’	7/8”	4’
3”	12’	1”	5’
4”	13’	1 1/4”	7’
5”	13’	1 1/2”	7’
6”	14’	1 3/4”	7’
		2”	7’

Bolt Tightening Torque Specifications

Series	Size	Thread	PP	PA	AL
HRL *(Std. Duty)*	0 to 6	1/4-20	8	10	12
HRS *(Heavy Duty)*	1 & 2	3/8-16	12	20	30
	3	3/8-16	15	25	35
	4	7/16-14	30	40	55
	5	5/8-11	45	55	120
	6	3/4-10	80	150	220
	7	7/8-9	110	200	250
	8	M30	180	350	500
	9	M30	200	370	500
	10	M30	270	470	600
HRZ *(Twin)*	1	1/4-20	5	6	–
	2 to 4	5/16-18	12	12	–
	5	5/16-18	8	8	–

Note: Torque is given in Nm (Nm x 0.7376 = Ft-lbs)

Properties of Materials *(clamp pairs)*

Properties	Polypropylene PP	Polyamide PA	Aluminum AL
Mechanical Properties Tensile Strength	4200 psi	7800-11500 psi	–
Flexural Yield Strength	7600 psi	20500 psi	–
Impact Strength (Izod Method)	No Failure	No Failure	–
Tensile Test	–	–	28000 psi
Brinell Hardness No.	–	–	60 BHN
Modules of Elasticity	–	–	9.7 x 106 - 11.1 x 106 psi
Thermal Properties Continuous Service Temperature Range	-22° to 194°F -30° to 90°C	-40° to 284°F -40° to 140°C	-67° to 500°F -55° to 260°C
Electrical Properties Volume Resistivity	1015 Ohm-cm	1015 Ohm-cm	–
Chemical Properties Chemical Resistance	Resistant to most aqueous solutions of inorganic salts, minerals, and organic acids, even at high temperatures.	Resistant to organic solvents, dilute acids, and bases. Resistant to radiation.	Resistant to neutral and sea water, organic acids, esters, oils, and inorganic salt solutions.

HRL Series

Standard Duty Clamps

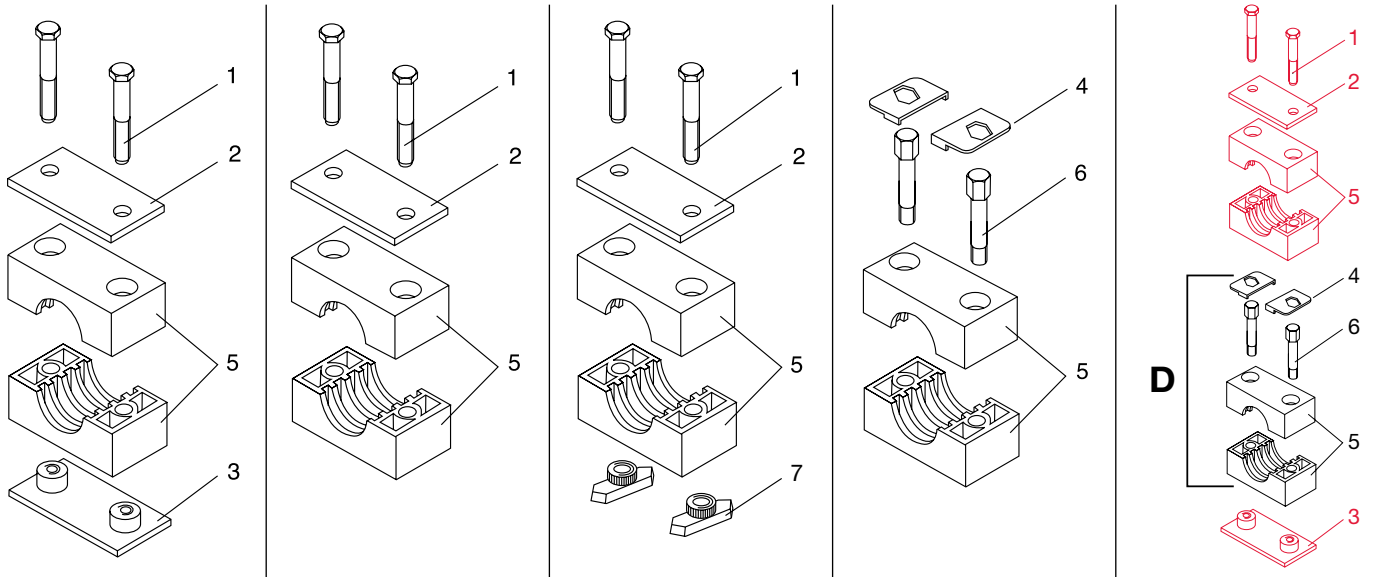

A
Single Clamp with Weld Plate

A1
Single Clamp without Weld Plate

A1TM
Single Clamp for C-Rail Mounting
(order C-Rail separately)
(size 1 to 8 only)

D
Single Clamp Stacking Module
(size 0 to 6 only)

A + D
Order one A *(red)* arrangement and one D *(black)* arrangement separately.

A maximum of 3 stacking modules is recommended

Parts Legend *(see page B1-14 to B1-18 to order parts separately)*

1	Hex Head Bolt	5	Clamp Pair
2	Top Plate	6	Stacking Bolt
3	Weld Plate	7	C-Rail Nut
4	Safety Plate		

Model Code

HRL 2 A 12.7 PP _ UNC

Series
- HRL = Standard duty single clamp with ribbed bore
- HRGL = Standard duty single clamp with smooth bore

Size Family
- 0 to 8 *(refer to table A on next page)*

Arrangement
- A = Single clamp with top plate and weld plate
- A1 = Single clamp without weld plate
- A1TM = C-Rail mounted clamp
- D = Single clamp stacking module *(size 0-6 only)*

Bore Size
- *(refer to table A on next page)*

Clamp Material
- PP = Polypropylene
- PA = Polyamide
- AL = Aluminum

Metal Component Material
- *(omit)* = Carbon Steel
- A2 = 304 Stainless Steel
- A4 = 316 Stainless Steel

Thread Type
- UNC = Standard
- M = Metric

PN#02080105 / 01.17 / ACC1603-1753

Dimensions

Size 0

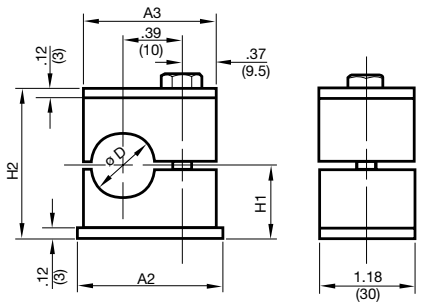

Sizes 1-8

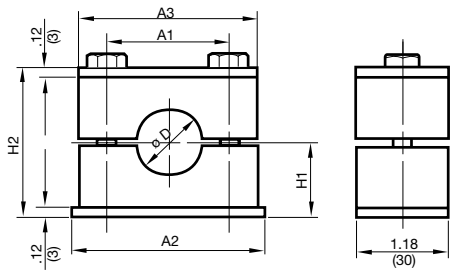

C-Rail Nut

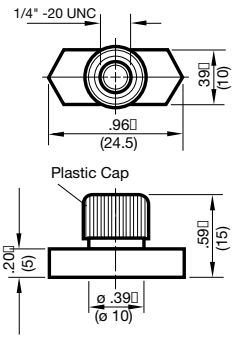

C-Rail

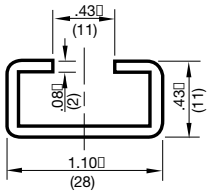

Table A

Size	øD Bore Size	Recommended Nominal Size		A1	A2	A3	H1	H2	Bolt Size Arrangement	Weight Arrangement	
		Tube O.D.	Pipe							A	A1
0	0.24 (6)	–	–	N/A	1.18 (30)	1.10 (28)	0.63 (16)	1.26 (32)	1/4-20 x 1-1/4 (M6 x 30)	0.14 (0.06)	0.12 (0.05)
	0.25 (6.4)	1/4”	–								
	0.31 (8.0)	5/16”	–								
	0.37 (9.5)	3/8”	–								
	0.39 (10)	–	1/8”								
	0.47 (12)	–	–								
1	0.24 (6)	–	–	0.79 (20)	1.42 (36)	1.34 (34)	0.63) (16)	1.26 (32)	1/4-20 x 1-1/4 (M6 x 30)	0.18 (0.08)	0.13 (0.06)
	0.25 (6.4)	1/4”	–								
	0.31 (8.0)	5/16”	–								
	0.37 (9.5)	3/8”	–								
	0.39 (10)	–	1/8”								
	0.47 (12)	–	–								
2	0.50 (12.7)	1/2”	–	1.02 (26)	1.65 (42)	1.57 (40)	0.77 (19.5)	1.53 (39)	1/4-20 x 1-1/2 (M6 x 35)	0.27 (0.12)	0.16 (0.07)
	0.54 (13.7)	–	1/4”								
	0.55 (14)	–	–								
	0.59 (15)	–	–								
	0.63 (16)	5/8”	–								
	0.67 (17.1)	–	3/8”								
	0.71 (18)	–	–								
3	0.75 (19)	3/4”	–	1.30 (33)	1.97 (50)	1.89 (48)	0.85 (21.5)	1.69 (43)	1/4-20 x 1-1/2 (M6 x 40)	0.31 (0.14)	0.22 (0.10)
	0.79 (20)	–	–								
	0.84 (21.3)	–	1/2”								
	0.87 (22)	–	–								
	0.91 (23)	–	–								
	0.98 (25)	–	–								
	1.0 (25.4)	1”	–								
4	1.05 (26.6)	–	3/4”	1.57 (40)	2.32 (59)	2.24 (57)	0.94 (24)	1.89 (48)	1/4-20 x 1-3/4 (M6 x 45)	0.33 (0.15)	0.27 (0.12)
	1.10 (28)	–	–								
	1.18 (30)	–	–								
5	1.26 (32)	1-1/4”	–	2.05 (52)	2.83 (72)	2.75 (70)	1.26 (32)	2.52 (64)	1/4-20 x 2-1/2 (M6 x 60)	0.42 (0.19)	0.31 (0.14)
	1.33 (33.7)	–	1”								
	1.38 (35)	–	–								
	1.50 (38)	1-1/2”	–								
	1.57 (40)	–	–								
	1.65 (42)	–	1-1/4”								
6	1.75 (44.5)	1-3/4”	–	2.60 (66)	3.46 (88)	3.38 (86)	1.42 (36)	2.83 (72)	1/4-20 x 2-3/4 (M6 x 70)	0.53 (0.24)	0.40 (0.18)
	1.9 (48.3)	–	1-1/2”								
	2.0 (50.8)	2”	–								
7	2.37 (60.3)	–	2	3.7 (94)	4.8 (122)	4.64 (118)	1.97 (50)	3.94 (100)	1/4-20 x 4 (M6 x 100)	0.82 (0.37)	0.53 (0.24)
	2.5 (63.5)	2 1/2”	–								
	2.87 (73)	–	2 1/2”								
	3 (76.1)	3”	–								
8	3.5 (88.9)	–	3”	4.72 (120)	5.8 (148)	5.67 (143.96)	2.44 (62)	4.88 (124)	1/4-20 x 5 (M6 x 125)	1.05 (0.48)	0.72 (0.33)

Notes:
1. Other bore diameters are available — Consult factory for details.
2. Dimensions are in inches (mm) and lbs (kg).
3. Dimensions are for general information only, all critical dimensions should be verified by requesting a certified print.

HRS Series

Heavy Duty Clamps

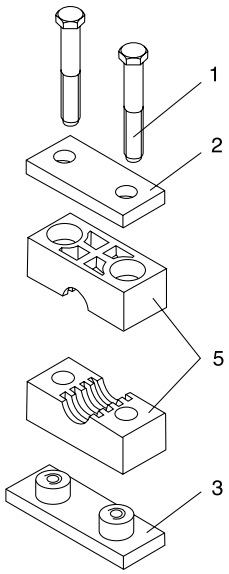

S
Single Clamp
with Weld Plate

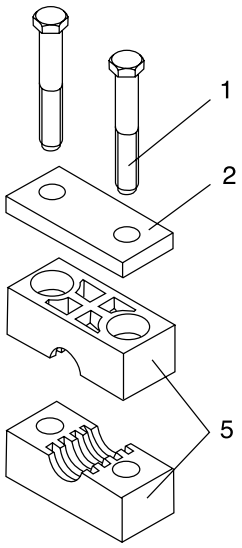

S1
Single Clamp
without Weld Plate

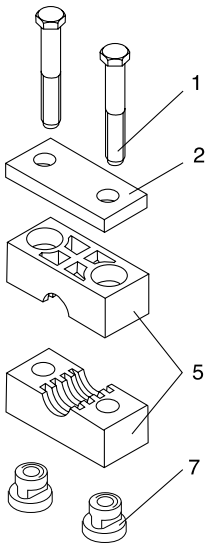

S1TM
Single Clamp for
C-Rail Mounting

(size 1 to 4 only)
(order C-Rail separately)

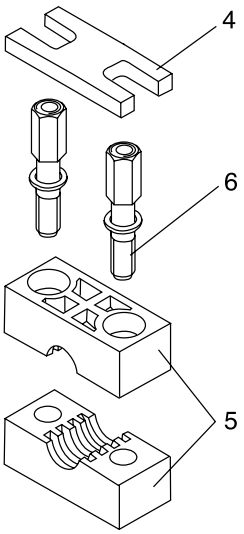

A
Single Clamp
Stacking Module

(size 1 to 7 only)

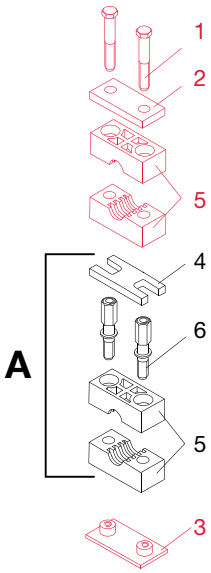

S + A
Order one S *(red)* arrangement and one A *(black)* arrangement separately.

A maximum of 3 stacking modules is recommended

Parts Legend *(see page B1-14 to B1-18 to order parts separately)*

1	Hex Head Bolt	5	Clamp Pair
2	Top Plate	6	Stacking Bolt
3	Weld Plate	7	C-Rail Nut
4	Safety Plate		

Model Code

HRS 1 S 12.7 PP __ UNC

Series
- HRS = Heavy duty single clamp with ribbed bore
- HRGS = Heavy duty single clamp with smooth bore

Size Family
- 1 to 10 (refer to table B on next page)

Arrangement
- S = Single clamp with top plate & weld plate
- S1 = Single clamp without weld plate
- S1TM = C-Rail mounted clamp *(sizes 1-4 only)*
- A = Single clamp stacking module *(sizes 1-7 only)*

Bore Size *(in mm)*
(refer to table B on next page)

Clamp Material
- PP = Polypropylene
- PA = Polyamide
- AL = Aluminum

Metal Component Material
- *(omit)* = Carbon Steel
- A4 = 316 Stainless Steel

Thread Type
- UNC = Standard
- M = Metric *(sizes 8, 9 and 10 available in Metric only)*

PN#02080105 / 01.17 / ACC1603-1753

Dimensions

All Sizes

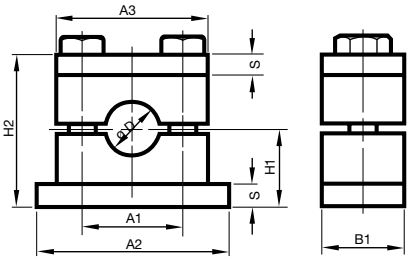

C-Rail Nut *(sizes 1-3)*

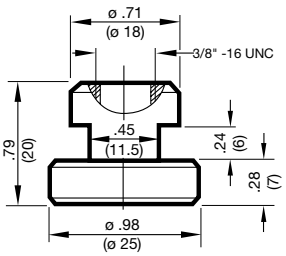

C-Rail Nut *(size 4)*

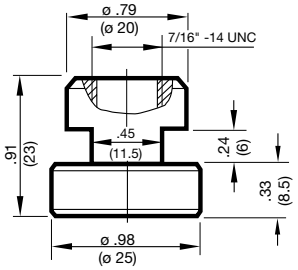

C-Rail *(all sizes)*

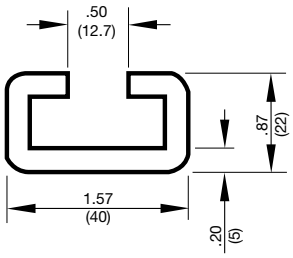

Table B

Size	øD Bore Size	Recommended Nominal Size Tube O.D.	Recommended Nominal Size Pipe	A1	A2	A3	B1	H1	H2	S	Bolt Size	Weight Arrangement S	Weight Arrangement S1
1	0.24 (6.0) 0.25 (6.4) 0.32 (8.0) 0.37 (9.5) 0.39 (10) 0.41 (10.3) 0.5 (12.7) 0.54 (13.7) 0.55 (14) 0.59 (15) 0.63 (16) 0.67 (17.1) 0.71 (18)	– 1/4” 5/16” 3/8” – – 1/2” – – – 5/8” – –	– – – – – 1/8” – 1/4” – – – 3/8” –	1.30 (33)	2.87 (73)	2.17 (55)	1.18 (30)	0.94 (24)	1.89 (48)	0.31 (8)	3/8-16 x 1-3/4 (M10 x 45)	0.52 (0.24)	0.26 (0.12)
2	0.75 (19) 0.79 (20) 0.84 (21.3) 0.87 (22) 0.98 (25) 1.0 (25.4) 1.05 (26.7) 1.1 (28) 1.18 (30)	3/4” – – 7/8” – 1” – – –	– – 1/2” – – – 3/4” – –	1.77 (45)	3.35 (85)	2.76 (70)	1.18 (30)	1.26 (32)	2.52 (64)	0.31 (8)	3/8-16x2-1/4 (M10 x 60)	0.72 (0.33)	0.34 (0.16)
3	0.98 (25) 1.18 (30) 1.26 (32) 1.33 (33.7) 1.38 (35) 1.5 (38) 1.57 (40) 1.65 (42)	– – 1-1/4” – – 1-1/2” – –	– – – 1” – – – 1-1/4”	2.36 (60)	3.94 (100)	3.35 (85)	1.18 (30)	1.50 (38)	2.99 (76)	0.31 (8)	3/8-16 x 2-3/4 (M10 x 70)	0.97 (0.44)	0.52 (0.24)
4	1.18 (30) 1.5 (38) 1.65 (42) 1.75 (44.5) 1.9 (48.3) 2.0 (50.8) 2.13 (54) 2.24 (57) 2.37 (60.3) 2.5 (63.5) 2.56 (65) 2.75 (70)	– 1-1/2” – 1-3/4” – 2” – 2-1/4” – 2-1/2” – 2-3/4”	– – 1-1/4” – 1-1/2” – – – 2” – – –	3.56 (90.5)	5.51 (140)	4.52 (115)	1.77 (45)	2.17 (55)	4.33 (110)	0.39 (10)	7/16-14 x 4 (M12 x 100)	2.58 (1.17)	1.35 (0.61)
5	1.5 (38) 2.6 (66) 2.76 (70) 2.87 (73) 3.0 (76.1) 3.5 (88.9)	1-1/2” – – – 3” –	– – – 2-1/2” – 3”	4.80 (122)	7.09 (180)	5.98 (152)	2.36 (60)	2.76 (70)	5.51 (140)	0.39 (10)	5/8-11 x 5-1/4 (M16 x 130)	4.37 (1.99)	2.50 (1.14)
6	2.56 (65) 3.78 (96) 4.0 (101.6) 4.25 (108) 4.5 (114.3)	– – 4” 4-1/4” 4-1/2”	– – 3-1/2” – 4”	6.61 (168)	8.86 (225)	8.07 (205)	3.15 (80)	3.94 (100)	7.87 (200)	0.59 (15)	3/4-10x7-1/2 (M20 x 190)	11.11 (5.05)	6.76 (3.07)
7	3.54 (90) 5.35 (136) 5.5 (139.7) 6.61 (168)	– – – –	– – 5” 6”	8.07 (205)	10.63 (270)	9.92 (252)	3.54 (90)	4.53 (115)	9.06 (230)	0.59 (15)	7/8-9x8-1/2 (M24 x 220)	15.89 (7.22)	9.58 (4.36)
8	7.63 (193.7) 8.62 (219.1)	7-5/8” –	7” 8”	10.43 (265)	13.39 (340)	12.60 (320)	4.72 (120)	6.30 (160)	12.60 (320)	0.98 (25)	M30 x 300	58.47 (26.58)	37.43 (17.01)
9	10.75 (273.0) 12.75 (323.9)	– –	10” 12”	15.55 (395)	20.47 (520)	18.35 (466)	6.30 (160)	9.25 (235)	18.50 (470)	1.18 (30)	M30 x 450	112.92 (51.33)	67.01 (30.46)
10	14 (355.6) 16 (406.4)	– –	14” 16”	20.87 (530)	26.77 (680)	24.80 (630)	7.09 (180)	11.42 (290)	22.23 (580)	1.18 (30)	M30 x 560	149.59 (67.99)	86.54 (39.34)

Notes:
1. Other bore diameters are available — Consult factory for details.
2. Dimensions are in inches (mm) and lbs (kg).
3. Dimensions are for general information only, all critical dimensions should be verified by requesting a certified print.

HRZ Series

Twin Clamps

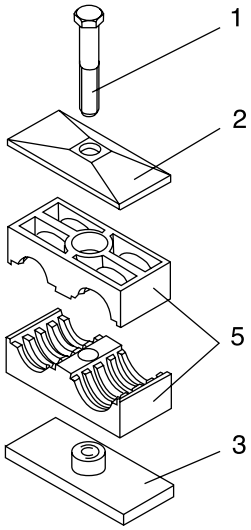

A
Twin Clamp
with Weld Plate

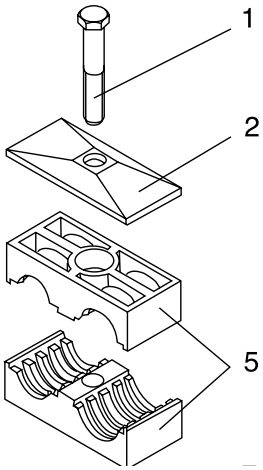

A1
Twin Clamp
without Weld Plate

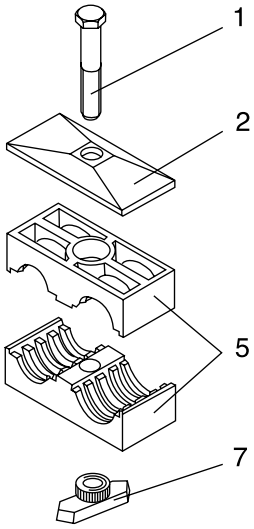

A1TM
Twin Clamp for
C-Rail Mounting
(order C-Rail separately)
(size 1 to 5 only)

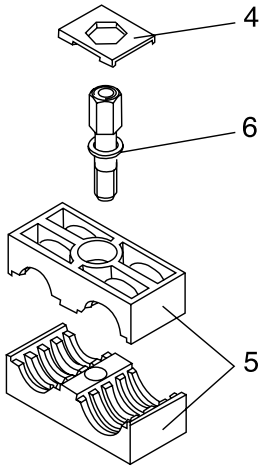

D
Twin Clamp
Stacking Module

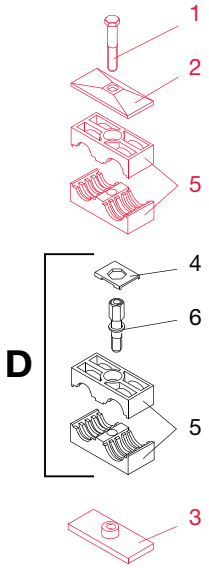

A + D
Order one A *(red)*
arrangement and
one D *(black)*
arrangement separately.

A maximum of 3 stacking modules is recommended

Parts Legend *(see page B1-14 to B1-18 to order parts separately)*

1	Hex Head Bolt	5	Clamp Pair
2	Top Plate	6	Stacking Bolt
3	Weld Plate	7	C-Rail Nut
4	Safety Plate		

Model Code

HRZ 1 A 9.5 - 9.5 PP __ UNC

Series
- HRZ = Standard duty twin clamp with ribbed bore
- HRGZ = Standard duty twin clamp with smooth bore

Size Family
- 1 to 5 *(refer to table C on next page)*

Arrangement
- A = Twin clamp with weld plate
- A1 = Twin clamp without weld plate
- A1TM = C-Rail mounted twin clamp
- D = Twin clamp stacking module

Bore Size *(in mm)*
(refer to table C on next page)

Clamp Material
- PP = Polypropylene
- PA = Polyamide
- AL = Aluminum

Metal Component Material
- *(omit)* = Carbon Steel
- A2 = 304 Stainless Steel
- A4 = 316 Stainless Steel

Thread Type
- UNC = Standard
- M = Metric

PN#02080105 / 01.17 / ACC1603-1753

Dimensions
HRZ Series
All Sizes

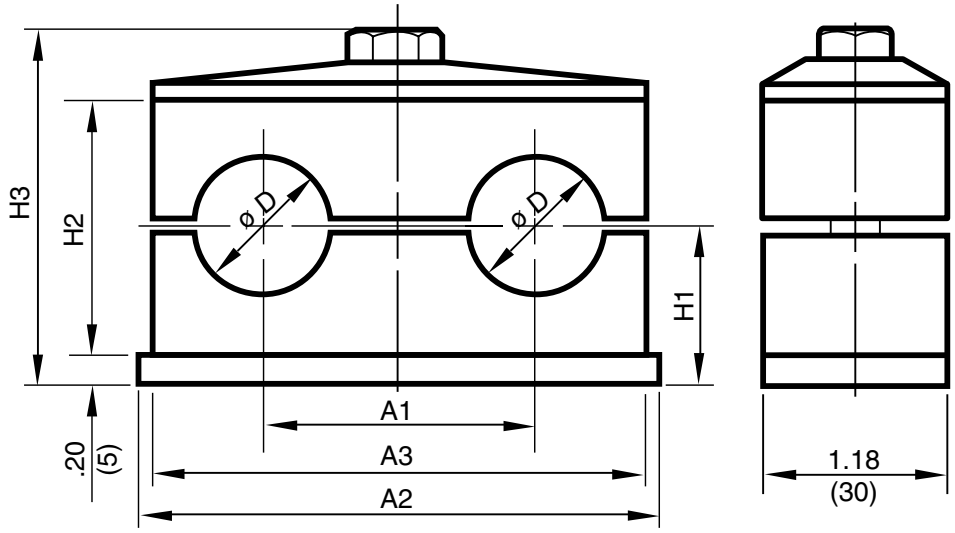

C-Rail Nut

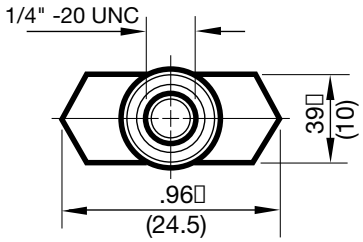

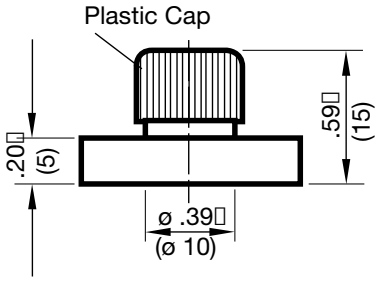

C-Rail

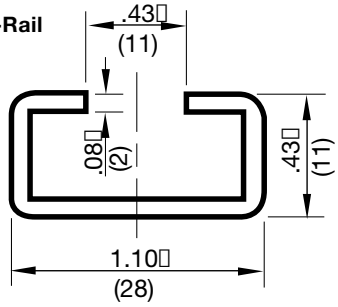

Table C

Size	øD Bore Size	Recommended Nominal Size		A1	A2	A3	H1	H2	H3	Bolt Size
		Tube O.D.	Pipe							
1	0.24 (6)	–	–	0.79 (20)	1.46 (37)	1.42 (36)	0.73 (18.5)	1.06 (27)	1.69 (43)	1/4-20 x 1-3/8 (M6 x 35)
	0.25 (6.4)	1/4”	–							
	0.32 (8)	5/16”	–							
	0.37 (9.5)	3/8”	–							
	0.39 (10)	–	1/8”							
	0.41 (10.3)	–	1/8”							
	0.47 (12)	–	–							
2	0.50 (12.7)	1/2”	–	1.14 (29)	2.17 (55)	2.09 (53)	0.71 (18)	1.02 (26)	1.71 (43.5)	5/16-18 x 1-3/8 (M8 x 35)
	0.54 (13.7)	–	1/4”							
	0.55 (14)	–	–							
	0.59 (15)	–	–							
	0.63 (16)	5/8”	–							
	0.67 (17.1)	–	3/8”							
3	0.75 (19)	3/4”	–	1.42 (36)	2.76 (70)	2.64 (67)	0.93 (23.5)	1.46 (37)	2.15 (54.5)	5/16-18 x 1-3/8 (M8 x 45)
	0.79 (20)	–	–							
	0.84 (21.3)	–	1/2”							
	0.87 (22)	7/8”	–							
	0.91 (23)	–	–							
	0.98 (25)	–	–							
	1.0 (25.4)	1”	–							
4	1.05 (26.7)	–	3/4”	1.77 (45)	3.35 (85)	3.23 (82)	1.02 (26)	1.65 (42)	2.34 (59.5)	5/16-18 x 2 (M8 x 50)
	1.1 (28)	–	–							
	1.18 (30)	–	–							
5	1.26 (32)	1-1/4”	–	2.20 (56)	4.33 (110)	4.17 (106)	1.26 (32)	2.13 (54)	2.81 (71.5)	5/16-18 x 2-1/2 (M8 x 60)
	1.33 (33.7)	–	1”							
	1.38 (35)	–	–							
	1.5 (38)	1-1/2”	–							
	1.57 (40)	–	–							
	1.65 (42)	–	1-1/4”							

Notes:
1. Other bore diameters are available — Consult factory for details.
2. Dimensions are in inches (mm) and lbs (kg).
3. Dimensions are for general information only, all critical dimensions should be verified by requesting a certified print.

HREL Series

Standard Duty Clamps with Rubber Inserts

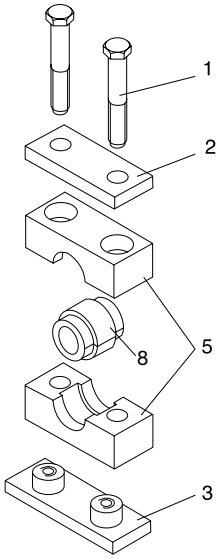

A
Single Clamp
with Weld Plate

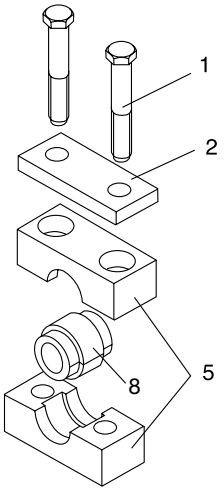

A1
Single Clamp
without Weld Plate

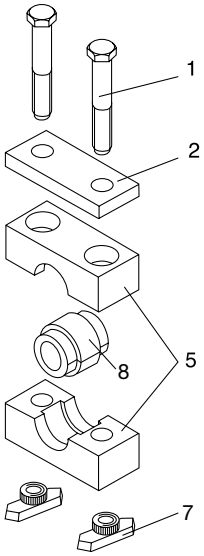

A1TM
Single Clamp
for C-Rail Mounting
(order C-Rail separately)
(size 1 to 8 only)

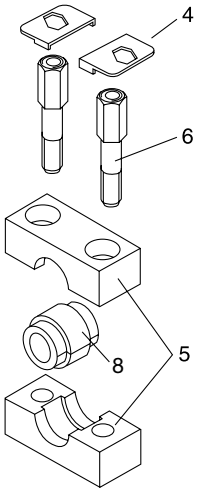

D
Single Clamp
Stacking Module

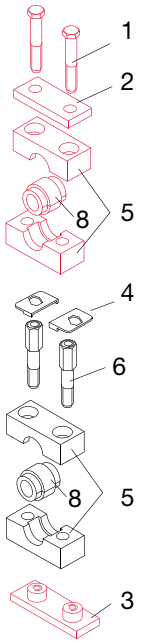

A + D
Order one A *(red)*
arrangement and
one D *(black)*
arrangement separately.

A maximum of 3 stacking modules is recommended

Parts Legend *(B1-14 to B1-18 to order parts separately)*

1	Hex Head Bolt	5	Clamp Pair
2	Top Plate	6	Stacking Bolt
3	Weld Plate	7	C-Rail Nut
4	Safety Plate	8	Rubber Insert

Model Code

HREL 4 A 12.7 PP _ UNC

Series

Size Family
4, 6 *(refer to table D on next page)*

Arrangement
A = Single clamp with top plate and weld plate
A1 = Single clamp stacking kit
A1TM = C-Rail mounted clamp
D = Single clamp stacking module

Bore Size *(in mm)*
(refer to table D on next page)

Clamp Material
PP = Polypropylene
PA = Polyamide

Metal Components Materials
(omit) = Carbon Steel
A2 = 304 Stainless Steel
A4 = 316 Stainless Steel

Thread Type
UNC = Standard
M = Metric

PN#02080105 / 01.17 / ACC1603-1753

Dimensions

All Sizes

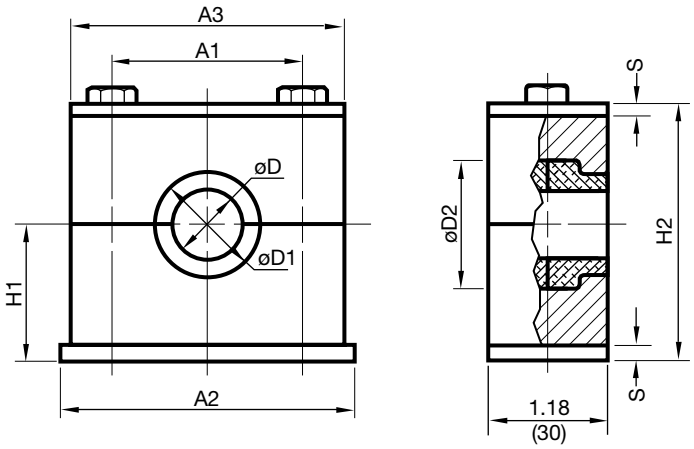

C-Rail Nut

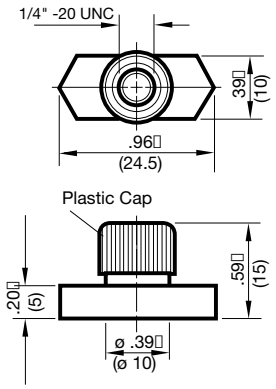

C-Rail

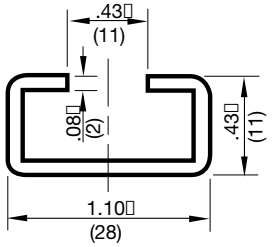

Table D

Clamp Size	EE-Rubber Insert Size	EE-Rubber Insert Bore Size øD	Recommended Nominal Size Tube O.D.	Recommended Nominal Size Pipe	Hose O.D. Min.	Hose O.D. Max.	øD1	øD2	H1	H2	A1	A2	A3	S	Bolt Size
4	2/4 L	0.24 (6)	–	–	0.22	0.24	1.00 (25.5)	1.22 (31)	0.925 (23.5)	1.85 (47)	1.57 (40)	2.32 (59)	2.24 (57)	0.118 (3)	1/4-20 x 1 3/4 (M6 x 45)
		0.32 (8)	5/16”	–	0.30	0.32									
		0.39 (10)	–	1/8”	0.37	0.39									
		0.47 (12)	–	–	0.45	0.47									
		0.50 (12.7)	1/2”	–	0.48	0.50									
		0.55 (14)	–	–	0.53	0.55									
		0.59 (15)	–	–	0.57	0.59									
		0.63 (16)	5/8”	–	0.61	0.63									
		0.68 (17.2)	–	3/8”	0.66	0.68									
		0.75 (19)	3/4”	–	0.73	0.75									
6	3/6 L	0.79 (20)	–	1/2”	0.77	0.79	1.54 (39)	1.81 (46)	1.40 (35.5)	2.80 (71)	2.60 (66)	3.46 (88)	3.39 (86)	0.118 (3)	1/4-20x2 3/4 (M6 x 70)
		0.87 (22)	7/8”	–	0.85	0.87									
		0.98 (25)	1”	–	0.96	0.98									
		1.06 (27)	–	3/4”	1.04	1.06									
		1.10 (28)	–	–	1.08	1.10									
		1.18 (30)	–	–	1.16	1.18									
		1.26 (32)	1 1/4”	–	1.24	1.26									

Notes:
1. Other bore diameters are available — Consult factory for details.
2. Dimensions are in inches (mm) and lbs (kg).
3. Dimensions are for general information only, all critical dimensions should be verified by requesting a certified print.

Parts

KP = Clamp Pair

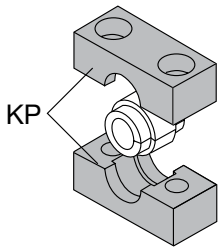

HREL 4 KP PP

Series

Size
4, 6 *(refer to table above)*

Clamp Pair

Clamp Material
PP = Polypropylene
PA = Polyamide

EE = Rubber Insert (Santoprene TPE 73)

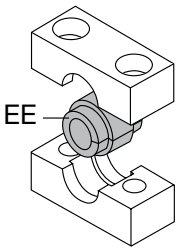

HRES 2/4 L EE 12

Series*

Size
2/4 L, 3/6 L *(refer to table above)*

Rubber Insert

Bore Size *(in mm)*
(refer to table above)

*HREL series use the same rubber inserts as the HRES series, therefore the model code for them is HRES.
Note:
All other components for these clamps are the same as for HRL series standard duty single clamps.
Refer to page B1-14 to B1-18 for details.

HRES Series

Heavy Duty Clamps with Rubber Inserts

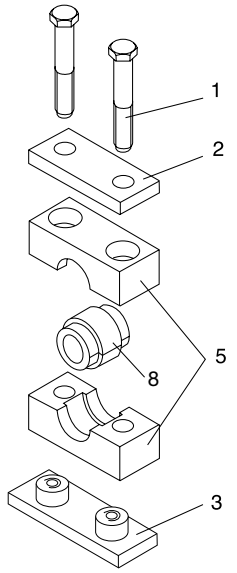

S

Single Clamp
with Weld Plate

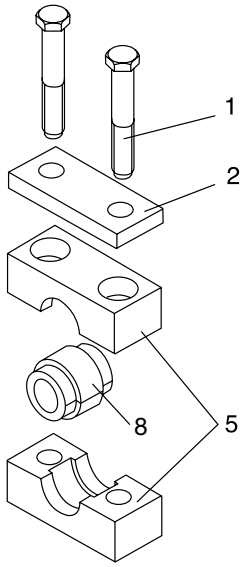

S1

Single Clamp
without Weld Plate

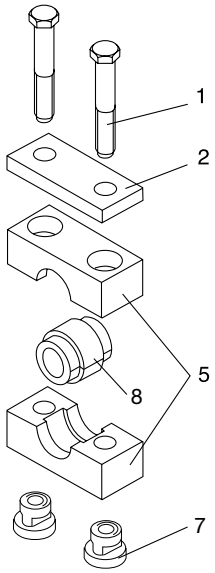

S1TM

Single Clamp for
C-Rail Mounting

(size 1 to 4 only)
(order C-Rail separately)

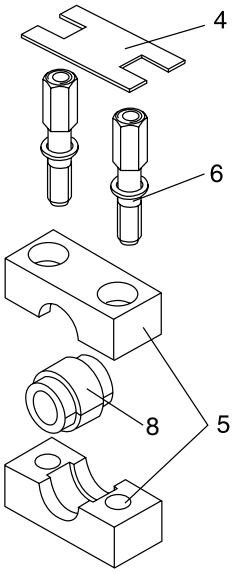

A

Single Clamp
Stacking Module

(size 1 to 5 only)

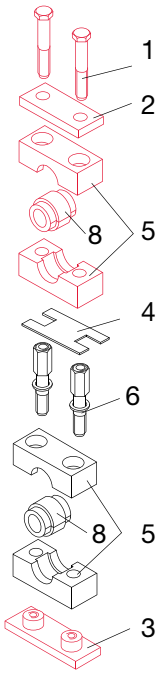

S + A

Order one S *(red)* arrangement and one A *(black)* arrangement separately.

A maximum of 3 stacking modules is recommended

Parts Legend *(see page B1-14 to B1-18 to order parts separately)*

1	Hex Head Bolt	5	Clamp Pair
2	Top Plate	6	Stacking Bolt
3	Weld Plate	7	C-Rail Nut
4	Safety Plate	8	Rubber Insert

Model Code

HRES 4 S 35 PP __ UNC

Series

Size Family
2 to 7 *(refer to table E on next page)*

Arrangement
S = Single clamp with weld plate
S1 = Single clamp stacking kit
S1TM = C-Rail mounted clamp
A = Single clamp stacking module

Bore Size *(in mm)*
(refer to table E on next page)

Clamp Material
PP = Polypropylene
PA = Polyamide

Metal Component Material
(omit) = Carbon Steel
A4 = 316 Stainless Steel

Thread Type
UNC = Standard
M = Metric

PN#02080105 / 01.17 / ACC1603-1753

Dimensions

All Sizes

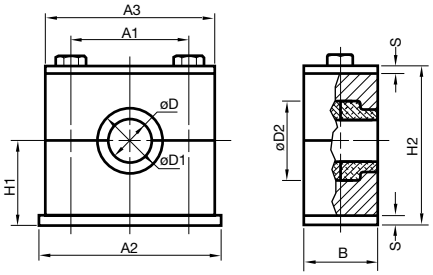

C-Rail Nut *(sizes 1-3)*

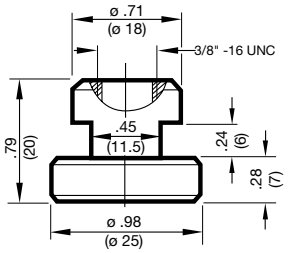

C-Rail Nut *(size 4)*

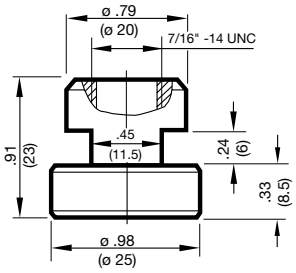

C-Rail *(all sizes)*

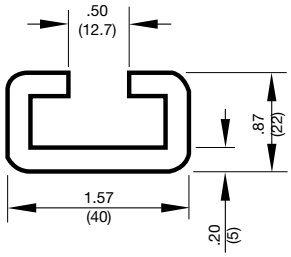

Table E

Clamp Size	EE-Rubber Insert Size	EE-Rubber Insert Bore Size øD in	Recommended Nominal Size Tube O.D.	Recommended Nominal Size Pipe	Recommended Nominal Size Hose O.D. Min.	Recommended Nominal Size Hose O.D. Max.	øD1	øD2	B	H1	H2	A1	A2	A3	S	Bolt Size
2	2/4 L	0.24 (6) 0.32 (8) 0.39 (10) 0.47 (12) 0.50 (12.7) 0.55 (14) 0.59 (15) 0.63 (16) 0.68 (17.2) 0.75 (19)	– 5/16” – – 1/2” – – 5/8” – 3/4”	– – 1/8” – – – – – 3/8” –	0.22 0.30 0.37 0.45 0.48 0.53 0.57 0.61 0.66 0.73	0.24 0.32 0.39 0.47 0.50 0.55 0.59 0.63 0.68 0.75	1.00 (25.5)	1.22 (31)	1.18 (30)	0.925 (23.5)	1.85 (47)	1.57 (40)	2.32 (59)	2.24 (57)	0.118 (3)	3/8-16 x 2 1/4 (M10 x 60)
3	3/6 L	0.79 (20) 0.87 (22) 0.98 (25) 1.06 (26.9) 1.10 (28) 1.18 (30) 1.26 (32)	– 7/8” 1” – – – 1 1/4”	1/2” – – 3/4” – – –	0.77 0.85 0.96 1.04 1.08 1.16 1.24	0.79 0.87 0.98 1.06 1.10 1.18 1.26	1.54 (39)	1.81 (46)	1.18 (30)	1.40 (35.5)	2.80 (71)	2.60 (66)	3.46 (88)	3.39 (86)	0.118 (3)	3/8-16 x 2 1/4 (M6 x 70)
4	4	1.33 (33.7) 1.38 (35) 1.50 (38) 1.58 (40) 1.65 (42) 1.79 (45.5) 1.89 (48) 2.01 (51) 2.10 (53.4) 2.22 (56.4)	- - 1 1/2” - - - - 2” - -	1” - - - - - 1 1/2” - - -	1.31 1.36 1.48 1.56 1.63 1.77 1.87 1.99 2.08 2.20	1.33 1.38 1.50 1.58 1.65 1.79 1.89 2.01 2.10 2.22	2.56 (65)	2.91 (74)	1.77 (45)	2.11 (53.5)	4.21 (107)	3.56 (90.5)	5.51 (140)	4.53 (115)	0.39 (10)	7/16-14x4 (M12 x 100)
5	5	2.36 (60) 2.56 (65) 2.76 (70) 2.87 (73) 2.99 (76)	- - - - 3”	2” - - 2 1/2” -	2.34 2.54 2.74 2.85 2.97	2.36 2.56 2.76 2.87 2.99	3.50 (89)	3.86 (98)	2.36 (60)	2.70 (68.5)	5.39 (137)	4.80 (122)	7.09 (180)	5.98 (152)	0.39 (10)	5/8-11x5 1/2 (M16 x 130)
6	6	3.27 (83) 3.50 (89) 3.70 (94) 3.98 (101)	- 3 1/2” - 4”	- 3” - 3 1/2”	3.19 3.43 3.62 3.90	3.27 3.50 3.70 3.98	4.57 (116)	5.20 (132)	3.15 (80)	3.88 (98.5)	7.76 (197)	6.61 (168)	8.86 (225)	8.07 (205)	0.59 (15)	3/4-10x7 1/2 (M20 x 190)
7	7	4.26 (108) 4.49 (114) 5.24 (133)	- - -	- 4” -	4.17 4.41 5.16	4.26 4.49 5.24	6.06 (154)	6.61 (168)	3.54 (90)	4.47 (113.5)	8.94 (227)	8.07 (205)	10.63 (270)	9.92 (252)	0.59 (15)	7/8-9x8 1/2 (M20 x 220)

Notes:
1. Other bore diameters are available — Consult factory for details.
2. Dimensions are in inches (mm) and lbs (kg).
3. Dimensions are for general information only, all critical dimensions should be verified by requesting a certified print.

Model Code

KP = Clamp Pair

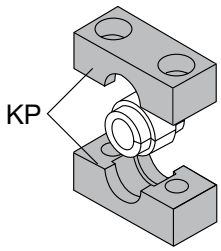

HRES 3 KP PP

Series

Size
2 to 7 *(refer to table above)*

Clamp Pair

Clamp Material
PP = Polypropylene
PA = Polyamide

EE = Rubber Insert *(Santoprene TPE 73 - sizes 2-4)*
(Buna NBR 70 - sizes 5-7)

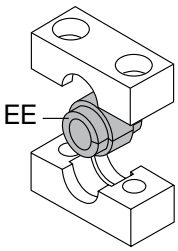

HRES 3/6 L EE 26.9

Series

Size
2/4 L to 7 *(refer to table above)*

Rubber Insert

Bore Size *(in mm)*
(refer to table above)

Note:
All other components for these clamps are the same as for HRS series heavy duty single clamps. Refer to page B1-14 to B1-18 for details.

HRL, HRS, & HRZ Series

Parts

Hex Head Bolts

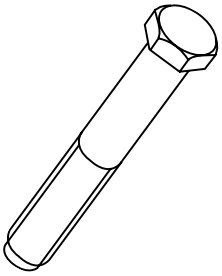

(UNC Threads)			Carbon Steel, Zinc Plated	316 Stainless Steel
Series	**Size**	**Bolt**	**Model Code**	**Model Code**
HRL	0	1/4”-20 x 1.25”	SCREW H 1/4-20 X 1.25 GR2	SCREW H 1/4-20 X 1.25 SS316
	1	1/4”-20 x 1.25”	SCREW H 1/4-20 X 1.25 GR2	SCREW H 1/4-20 X 1.25 SS316
	2	1/4”-20 x 1.50”	SCREW H 1/4-20 X 1.50 GR2	SCREW H 1/4-20 X 1.50 SS316
	3	1/4”-20 x 1.50”	SCREW H 1/4-20 X 1.50 GR2	SCREW H 1/4-20 X 1.50 SS316
	4	1/4”-20 x 1.75”	SCREW H 1/4-20 X 1.75 GR2	SCREW H 1/4-20 X 1.75 SS316
	5	1/4”-20 x 2.50”	SCREW H 1/4-20 X 2.50 GR2	SCREW H 1/4-20 X 2.50 SS316
	6	1/4”-20 x 2.75”	SCREW H 1/4-20 X 2.75 GR2	SCREW H 1/4-20 X 2.75 SS316
	7	1/4”-20 x 4.00”	SCREW H 1/4-20 X 4.00 GR2	*Only available in METRIC – see below*
	8	1/4”-20 x 5.00”	SCREW H 1/4-20 X 5.00 GR2	
HRS	1	3/8”-16 x 1.75”	SCREW H 3/8-16 X 1.75 GR5	SCREW H 3/8-16 X 1.75 SS316
	2	3/8”-16 x 2.25”	SCREW H 3/8-16 X 2.25 GR5	SCREW H 3/8-16 X 2.25 SS316
	3	3/8”-16 x 2.75”	SCREW H 3/8-16 X 2.75 GR5	SCREW H 3/8-16 X 2.75 SS316
	4	7/16”-14 x 4.00”	SCREW H 7/16-14 X 4.00 GR5	SCREW H 7/16-14 X 4.00 SS316
	5	5/8”-11 x 5.25”	SCREW H 5/8-11 X 5.25 GR5	SCREW H 5/8-11 X 5.25 SS316
	6	3/4”-10 x 7.50”	SCREW H 3/4-10 X 7.50 GR5	SCREW H 3/4-10 X 7.50 SS316
	7	7/8”-9 x 8.50”	SCREW H 7/8-9 X 8.50 GR5	SCREW H 7/8-9 X 8.50 SS316
	8	*Only available in METRIC See below*		
	9			
	10			
HRZ	1	1/4”-20 x 1.25”	SCREW H 1/4-20 X 1.375 GR2	SCREW H 1/4-20 X 1.25 SS316
	2	5/16”-18 x 1.25”	SCREW H 5/16-18 X 1.375 GR2	SCREW H 5/16-18 X 1.25 SS316
	3	5/16”-18 x 1.75”	SCREW H 5/16-18 X 1.875 GR2	SCREW H 5/16-18 X 1.75 SS316
	4	5/16”-18 x 2.00”	SCREW H 5/16-18 X 2.00 GR2	SCREW H 5/16-18 X 2.00 SS316
	5	5/16”-18 x 2.50”	SCREW H 5/16-18 X 2.50 GR2	SCREW H 5/16-18 X 2.50 SS316

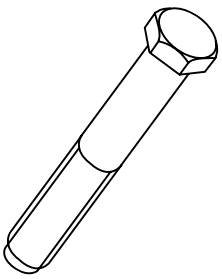

(METRIC Threads)			Carbon Steel, Zinc Plated	316 Stainless Steel
Series	**Size**	**Bolt**	**Model Code**	**Model Code**
HRL	0	M6 x 30	SCREW H M6 x 30-8.8	SCREW H M6 x 30 A4
	1	M6 x 30	SCREW H M6 x 30-8.8	SCREW H M6 x 30 A4
	2	M6 x 35	SCREW H M6 x 35-8.8	SCREW H M6 x 35 A4
	3	M6 x 40	SCREW H M6 x 40-8.8	SCREW H M6 x 40 A4
	4	M6 x 45	SCREW H M6 x 45-8.8	SCREW H M6 x 45 A4
	5	M6 x 60	SCREW H M6 x 60-8.8	SCREW H M6 x 60 A4
	6	M6 x 70	SCREW H M6 x 70-8.8	SCREW H M6 x 70 A4
	7	M6 x 100	SCREW H M6 x 100-8.8	SCREW H M6 x 100 A4
	8	M6 x 125	SCREW H M6 x 125-8.8	SCREW H M6 x 125 A4
HRS	1	M10 x 45	SCREW H M10 x 45-8.8	SCREW H M10 x 45 A4
	2	M10 x 60	SCREW H M10 x 60-8.8	SCREW H M10 x 60 A4
	3	M10 x 70	SCREW H M10 x 70-8.8	SCREW H M10 x 70 A4
	4	M12 x 100	SCREW H M12 x 100-8.8	SCREW H M12 x 100 A4
	5	M16 x 130	SCREW H M16 x 130-8.8	SCREW H M16 x 130 A4
	6	M20 x 190	SCREW H M16 x 190-8.8	SCREW H M16 x 190 A4
	7	M24 x 220	SCREW H M24 x 220-8.8	SCREW H M24 x 220 A4
	8	M30 x 300	SCREW H M30 x 300-8.8	SCREW H M30 x 300 A4
	9	M30 x 450	SCREW H M30 x 450-8.8	SCREW H M30 x 450 A4
	10	M30 x 560	SCREW H M30 x 560-8.8	SCREW H M30 x 560 A4
HRZ	1	M6 x 35	SCREW H M6 x 35-8.8	SCREW H M6 x 35 A4
	2	M8 x 35	SCREW H M8 x 35-8.8	SCREW H M8 x 35 A4
	3	M8 x 45	SCREW H M8 x 45-8.8	SCREW H M8 x 45 A4
	4	M8 x 50	SCREW H M8 x 50-8.8	SCREW H M8 x 50 A4
	5	M8 x 60	SCREW H M8 x 60-8.8	SCREW H M8 x 60 A4

Top Plates

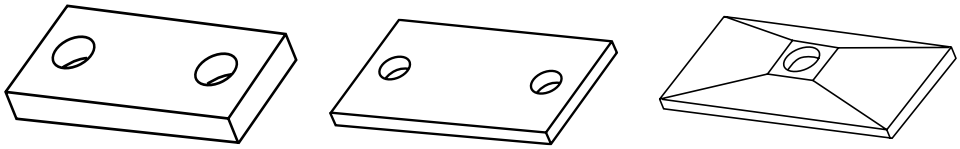

Model Code

HRL 3 DP ST ZN

Series
HRL, HRS, HRZ

Clamp Size

Top Plate

Material
ST = Carbon Steel
A2 = 304 Stainless Steel *(Not available for HRS series)*
A4 = 316 Stainless Steel

Material Finish
(omit) A2 and A4 Stainless Steel
ZN = Zinc Plated
ZN Ni = Zinc Nickel Plated *(Standard for HRL and HRZ)*

Weld Plates

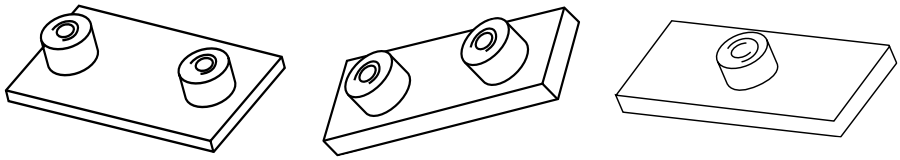

Model Code

HRL 3 AP ST UNC BL

Series
HRL, HRS, HRZ

Clamp Size

Weld Plate

Material
ST = Carbon Steel
A2 = 304 Stainless Steel *(Not available for HRS series)*
A4 = 316 Stainless Steel

Thread Type
UNC = Standard
M = Metric

Material Finish
(omit) A2 and A4 Stainless Steel
BL = Phosphate Coated *(Standard)*
ZN = Zinc Plated
ZN Ni = Zinc Nickel Plated

HRL, HRS, & HRZ Series (cont'd)

Parts

Safety Plates

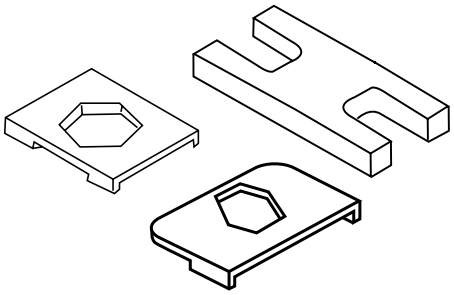

		Carbon Steel, Zinc Plated	316 Stainless Steel
Series	**Size**	**Model Code**	**Model Code**
HRL	0-6	HRL 0-6 SIP ST ZN	HRL 0-6 SIP A4
HRS	1	HRS 1 SIP ST ZN	HRS 1 SIP A4
	2	HRS 2 SIP ST ZN	HRS 2 SIP A4
	3	HRS 3 SIP ST ZN	HRS 3 SIP A4
	4	HRS 4 SIP ST ZN	HRS 4 SIP A4
	5	HRS 5 SIP ST ZN	HRS 5 SIP A4
	6	HRS 6 SIP ST ZN	HRS 6 SIP A4
	7	HRS 7 SIP ST ZN	HRS 7 SIP A4
HRZ	1	HRZ 1 SIP ST ZN	HRZ 1 SIP A4
	2-5	HRZ 2/5 SIP ST ZN	HRZ 2/5 SIP A4

Stacking Bolts

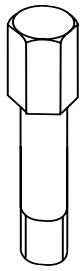

(UNC Threads)		Carbon Steel, Zinc Plated	316 Stainless Steel
Series	**Size**	**Model Code**	**Model Code**
HRL	0 & 1	HRL/Z 0+1 AF ST UNC ZN	HRL/Z 0+1 AF A4 UNC
	2	HRL 2 AF ST UNC ZN	HRS 2 AF A4 UNC
	3	HRL 3 AF ST UNC ZN	HRS 3 AF A4 UNC
	4	HRL 4 AF ST UNC ZN	HRS 4 AF A4 UNC
	5	HRL 5 AF ST UNC ZN	HRS 5 AF A4 UNC
	6	HRL 6 AF ST UNC ZN	HRS 6 AF A4 UNC
HRS	1	HRS 1 AF ST UNC ZN	HRS 1 AF A4 UNC
	2	HRS 2 AF ST UNC ZN	HRS 2 AF A4 UNC
	3	HRS 3 AF ST UNC ZN	HRS 3 AF A4 UNC
	4	HRS 4 AF ST UNC ZN	HRS 4 AF A4 UNC
	5	HRS 5 AF ST UNC ZN	HRS 5 AF A4 UNC
	6	HRS 6 AF ST UNC ZN	HRS 6 AF A4 UNC
	7	HRS 7 AF ST UNC ZN	HRS 7 AF A4 UNC
HRZ	1	HRL/Z 0+1 AF ST UNC ZN	HRL/Z 0+1 AF A4 UNC
	2	HRZ 2 AF ST UNC ZN	HRZ 2 AF A4 UNC
	3	HRZ 3 AF ST UNC ZN	HRZ 3 AF A4 UNC
	4	HRZ 4 AF ST UNC ZN	HRZ 4 AF A4 UNC
	5	HRZ 5 AF ST UNC ZN	HRZ 5 AF A4 UNC

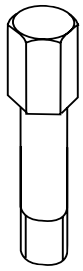

(METRIC Threads)		Carbon Steel, Zinc Plated	316 Stainless Steel
Series	**Size**	**Model Code**	**Model Code**
HRL	0 & 1	HRL/Z 0+1 AF ST M ZN	HRL/Z 0+1 AF A4 M
	2	HRL 2 AF ST M ZN	HRL 2 AF A4 UNC
	3	HRL 3 AF ST M ZN	HRL 3 AF A4 UNC
	4	HRL 4 AF ST M ZN	HRL 4 AF A4 UNC
	5	HRL 5 AF ST M ZN	HRL 5 AF A4 UNC
	6	HRL 6 AF ST M ZN	HRL 6 AF A4 UNC
HRS	1	HRS 1 AF10 ST M ZN	HRS 1 AF10 A4 M
	2	HRS 2 AF10 ST M ZN	HRS 2 AF10 A4 M
	3	HRS 3 AF10 ST M ZN	HRS 3 AF10 A4 M
	4	HRS 4 AF ST M ZN	HRS 4 AF A4 M
	5	HRS 5 AF ST M ZN	HRS 5 AF A4 M
	6	HRS 6 AF ST M ZN	HRS 6 AF A4 M
	7	HRS 7 AF ST M ZN	HRS 7 AF A4 M
HRZ	1	HRL/Z 0+1 AF ST M ZN	HRL/Z 0+1 AF A4 M
	2	HRZ 2 AF ST M ZN	HRZ 2 AF A4 M
	3	HRZ 3 AF ST M ZN	HRZ 3 AF A4 M
	4	HRZ 4 AF ST M ZN	HRZ 4 AF A4 M
	5	HRZ 5 AF ST M ZN	HRZ 5 AF A4 M

Clamp Pairs

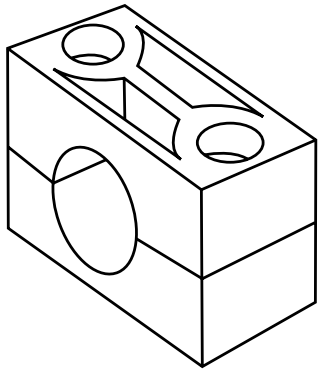

HRL 3 KP d PP

Series
- HRL = Standard Duty *(Ribbed Profile)*
- HRGL = Standard Duty *(Smooth Profile)*
- HRS = Heavy Duty *(Ribbed Profile)*
- HRGS = Heavy Duty *(Smooth Profile)*

Clamp Size

Clamp Pair

Bore Diameter (mm)

Clamp Material
- PP = Polypropylene
- PA = Polyamide
- PE = Polyethylene
- AL = Aluminum

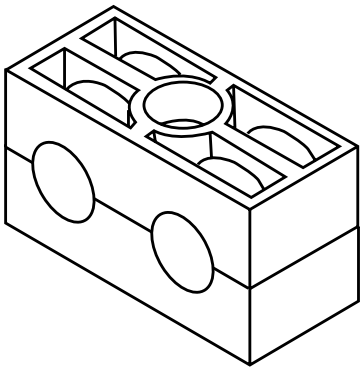

HRZ 3 KP d1-d2 PP

Series
- HRZ = Standard Duty Twin (Ribbed Profile)
- HRGZ = Standard Duty Twin (Smooth Profile)

Clamp Size

Clamp Pair

Bore Diameter (mm)

Clamp Material
- PP = Polypropylene
- PA = Polyamide
- PE = Polyethylene
- AL = Aluminum

HREL & HRES Series

Clamps with Rubber Inserts

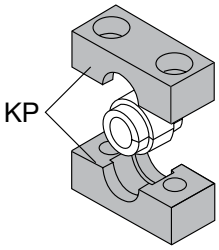

HRES 3/6L KP PP

Series
- HREL, HRES

Size

Clamp Pair

Material
- PP = Polypropylene
- PA = Polyamide

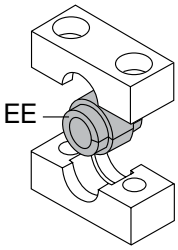

HRES 3/6 L EE d TPE73

Series*
- HREL, HRES

Size

Rubber Insert

Bore Diameter *(mm)*

Material
- TPE 73 = Santoprene TPE 73
- NBR = Nitrile (Buna)

*HREL series use the same rubber inserts as the HRES series, therefore the model code for them is HRES.
Note:
All other components for these clamps are the same as for HRL series standard duty single clamps.
Refer to page B1-14 to B1-18 for details.

HRL, HRS, & HRZ Series

Parts

C-Rail Nuts

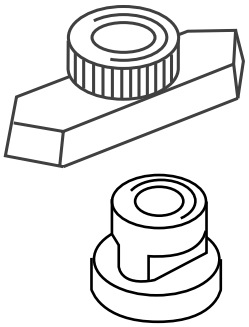

(UNC Threads)		Carbon Steel, Zinc Plated	316 Stainless Steel
Series	**Size**	**Model Code**	**Model Code**
HRL	0	HRL 0-6 TM1/4 UNC ST ZN	HRL 0-6 TM 1/4 UNC A4
	1		
	2		
	3		
	4		
	5		
	6		
	7		
	8		
HRS	1	HRS 1-3 TM3/8 UNC ST ZN	HRS 1-3 TM3/8 UNC A4
	2		
	3		
	4	HRS 4 TM7/16 UNC ST ZN	HRS 4 TM7/16 UNC A4
HRZ	1	HRL 0-6 TM1/4 UNC ST ZN	HRL 0-6 TM1/4 UNC A4
	2	HRZ 2-5 TM5/16 UNC ST ZN	HRZ 2-5 TM5/16 UNC A4
	3		
	4		
	5		

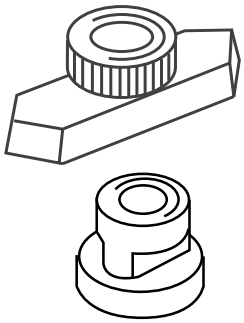

(METRIC Threads)		Carbon Steel, Zinc Plated	316 Stainless Steel
Series	**Size**	**Model Code**	**Model Code**
HRL	0	HRL 0-6 TM6 M ST ZN	HRL 0-6 TM6 M A4
	1		
	2		
	3		
	4		
	5		
	6		
	7		
	8		
HRS	1	HRS 1-3 TM10 M ST ZN	HRS 1-3 TM10 M A4
	2		
	3		
	4	HRS 4 TM12 M ST ZN	HRS 4 TM12 M A4
HRZ	1	HRL 0-6 TM6 M ST ZN	HRL 0-6 TM6 M A4
	2	HRZ 2-5 TM8 M ST ZN	HRZ 2-5 TM8 M A4
	3		
	4		
	5		

C-Rail

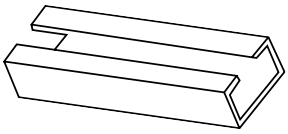

		Carbon Steel,Phosphate Coated	316 Stainless Steel
Series	**Size**	**Model Code**	**Model Code**
HRL	1M	HRL TS 28X11 ST BL 1M	HRL TS 28X11 A4 1M
	2M	HRL TS 28X11 ST BL 2M	HRL TS 28X11 A4 2M
HRS	1M	HRS TS 40X22 ST BL 1M	HRS TS 40X22 A4 1M
	2M	HRS TS 40X22 ST BL 2M	HRS TS 40X22 A4 2M
HRZ	1M	HRL TS 28X11 ST BL 1M	HRL TS 28X11 A4 1M
	2M	HRL TS 28X11 ST BL 2M	HRL TS 28X11 A4 2M

HRL & HRS Series

with Stainless Steel Metal Components

HRL – **Standard Duty** HRS – **Heavy Duty**

Description

Clamps with stainless steel metal components are available for corrosive environments. Our complete line of DIN 3015 clamps are available in stainless steel. Some models are special order, which may require minimum quantities, and/or extended delivery times. Listed here are the standard duty and heavy duty single clamps with weld plate.

304 Stainless Steel: (A2)

- Available from stock
- UNC bolts

316 Stainless Steel: (A4)

- Salt water resistance
- HRL sizes 1-5 in UNC - available from stock
- HRS sizes 1-5 in UNC
- Larger sizes in metric only

Typical Arrangement

Single Clamp with Weld Plate (HRL...A...) for Standard Duty (HRS...S...) for Heavy Duty

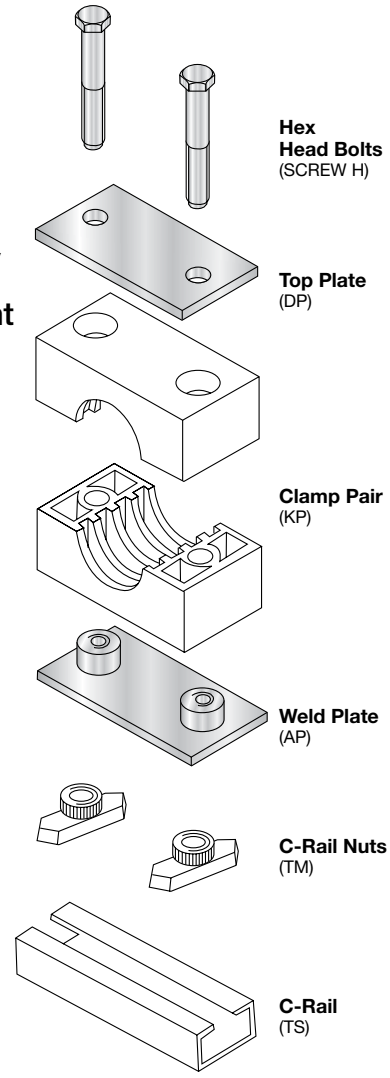

316 Stainless Steel UNC Stocked Program

Light Duty Series (HRL)

Size	Model Code	Part Number
Arrangements (complete with PP clamp pair)		
1 2 3 4 5	HRL 1 A XX PP A4 UNC HRL 2 A XX PP A4 UNC HRL 3 A XX PP A4 UNC HRL 4 A XX PP A4 UNC HRL 5 A XX PP A4 UNC	XX = bore diameter A unique part number exists for each individual clamp bore diameter. A complete model code is sufficient for ordering. Use the dimensions table for standard HRL clamps on page B1-5 for available bore sizes.
Weld Plates		
1	HRL 1 AP A4 UNC	00268617
2	HRL 2 AP A4 UNC	03001899
3	HRL 3 AP A4 UNC	00261220
4	HRL 4 AP A4 UNC	00261221
5	HRL 5 AP A4 UNC	00261222
Top Plates		
1	HRL 1 DP A4	00261108
2	HRL 2 DP A4	00261109
3	HRL 3 DP A4	00261110
4	HRL 4 DP A4	00261111
5	HRL 5 DP A4	00261112
Ext Hex Screws		
1	Screw H 1/4-20 x 1.25 SS316	02700627
2	Screw H 1/4-20 x 1.50 SS316	02700906
3	Screw H 1/4-20 x 1.50 SS316	02700906
4	Screw H 1/4-20 x 1.75 SS316	02700157
5	Screw H 1/4-20 x 2.50 SS316	02700646

Heavy Duty Series (HRS)

Size	Model Code	Part Number
Arrangements *(complete with PP clamp pair)*		
1 2 3 4 5	HRS 1 S XX PP A4 UNC HRS 2 S XX PP A4 UNC HRS 3 S XX PP A4 UNC HRS 4 S XX PP A4 UNC HRS 5 S XX PP A4 UNC	XX = bore diameter A unique part number exists for each individual clamp bore diameter. A complete model code is sufficient for ordering. Use the dimensions table for standard HRS clamps on page B1-7 for available bore sizes.
Weld Plates		
1	HRS 1 AP A4 UNC	00268617
2	HRS 2 AP A4 UNC	03001899
3	HRS 3 AP A4 UNC	00261220
4	HRS 4 AP A4 UNC	00261221
5	HRS 5 AP A4 UNC	00261222
Top Plates		
1	HRS 1 DP A4	00261108
2	HRS 2 DP A4	00261109
3	HRS 3 DP A4	00261110
4	HRS 4 DP A4	00261111
5	HRS 5 DP A4	00262022
Ext Hex Screws		
1	Screw H 3/8-16x1.75 SS316	02701227
2	Screw H 3/8-16x2.25 SS316	02701234
3	Screw H 3/8-16x2.75 SS316	02702474
4	Screw H 3/8-16x4.00 SS316	02702475
5	Screw H 3/8-16x5.25 SS316	02703106

HRL Standard Duty

304 stainless steel (A2) metal components

Size	Model Code	Part Number
	Arrangements *(complete with PP clamp pair)*	
1	HRL 1 A XX PP A2 UNC	XX = bore diameter A unique part number exists for each individual clamp bore diameter. A complete model code is sufficient for ordering. Use the dimensions table for standard HRL clamps on page B1-5 for available bore sizes.
2	HRL 2 A XX PP A2 UNC	
3	HRL 3 A XX PP A2 UNC	
4	HRL 4 A XX PP A2 UNC	
5	HRL 5 A XX PP A2 UNC	
6	HRL 6 A XX PP A2 UNC	
	Weld Plates	
1	HRL 1 AP A2 UNC	02701275
2	HRL 2 AP A2 UNC	02701276
3	HRL 3 AP A2 UNC	02701277
4	HRL 4 AP A2 UNC	02701278
5	HRL 5 AP A2 UNC	02701279
6	HRL 6 AP A2 UNC	02701280
	Top Plates	
1	HRL 1 DP A2	02701283
2	HRL 2 DP A2	02701284
3	HRL 3 DP A2	02701285
4	HRL 4 DP A2	02701286
5	HRL 5 DP A2	02701287
6	HRL 6 DP A2	02701288
	Ext Hex Screws (316 Stainless Steel)	
1	SCREW H 1/4-20 x 1.25 SS316	02700627
2	SCREW H 1/4-20 x 1.50 SS316	02700906
3	SCREW H 1/4-20 x 1.50 SS316	02700906
4	SCREW H 1/4-20 x 1.75 SS316	02700157
5	SCREW H 1/4-20 x 2.50 SS316	02700646
6	SCREW H 1/4-20 x 2.75 SS316	02701205
	HRL C-Rail	
1	HRL TS 28 x 11 A4 2M	00261229
	HRL C-Rail Nuts	
1	HRL 0-6 TM 1/4 UNC A4	03035720

316 stainless steel (A4) metal components (metric)

Size	Model Code	Part Number
	Arrangements *(complete with PP clamp pair)*	
1	HRL 1 A XX PP A4 M	XX = bore diameter A unique part number exists for each individual clamp bore diameter. A complete model code is sufficient for ordering. Use the dimensions table for standard HRL clamps on page B1-5 for available bore sizes.
2	HRL 2 A XX PP A4 M	
3	HRL 3 A XX PP A4 M	
4	HRL 4 A XX PP A4 M	
5	HRL 5 A XX PP A4 M	
6	HRL 6 A XX PP A4 M	
	Weld Plates (metric thread)	
1	HRL 1 AP A4 M	00268508
2	HRL 2 AP A4 M	00268509
3	HRL 3 AP A4 M	00268510
4	HRL 4 AP A4 M	00268511
5	HRL 5 AP A4 M	00261215
6	HRL 6 AP A4 M	00261216
	Top Plates	
1	HRL 1 DP A4	00261108
2	HRL 2 DP A4	00261109
3	HRL 3 DP A4	00261110
4	HRL 4 DP A4	00261111
5	HRL 5 DP A4	00261112
6	HRL 6 DP A4	00261113
	Hex Head Bolts	
1	SCREW H M6X30 A4	00603039
2	SCREW H M6X35 A4	00602136
3	SCREW H M6X40 A4	00602138
4	SCREW H M6X45 A4	00602140
5	SCREW H M6X60 A4	00602142
6	SCREW H M6X70 A4	00602144

HRS Heavy Duty

316 stainless steel (A4) metal components (metric)

Size	Model Code	Part Number
	Arrangements *(complete with PP clamp pair)*	
1	HRS 1 S XX PP A4 M	XX = bore diameter A unique part number exists for each individual clamp bore diameter. A complete model code is sufficient for ordering. Use the dimensions table for standard HRS clamps on page B1-7 for available bore sizes.
2	HRS 2 S XX PP A4 M	
3	HRS 3 S XX PP A4 M	
4	HRS 4 S XX PP A4 M	
5	HRS 5 S XX PP A4 M	
6	HRS 6 S XX PP A4 M	
	Weld Plates (metric thread)	
1	HRS 1 AP A4 M	00263646
2	HRS 2 AP A4 M	00263647
3	HRS 3 AP A4 M	00263648
4	HRS 4 AP A4 M	00267902
5	HRS 5 AP A4 M	00263700
6	HRS 6 AP A4 M	00263701
	Top Plates	
1	HRS 1 DP A4	00262018
2	HRS 2 DP A4	00262019
3	HRS 3 DP A4	00262020
4	HRS 4 DP A4	00262021
5	HRS 5 DP A4	00262022
6	HRS 6 DP A4	00262023
	Hex Head Bolts (metric)	
1	SCREW H M10X45 A4	00602151
2	SCREW H M10X60 A4	00602153
3	SCREW H M10X70 A4	00602155
4	SCREW H M12X100 A4	00602157
5	SCREW H M16X130 A4	00602160
6	SCREW H M20X190 A4	00602163
	HRS C-Rail	
1	HRS TS 40X22 A4 2M	00263359
	HRS C-Rail Nuts	
1	HRS TM 10 A4 M	00262736
2	HRS TM 12 A4 M	00262739

B2

Standard Clamps

In addition to the DIN 3015 Clamps HYDAC offers other standard products that assure a simple, reliable dampening support for lines which absorb shock, dampen vibration, and reduce noise in plumbing systems.
Please contact HYDAC to discuss what product is right for you and your application.

HOM Series

Flat Cushion Clamps

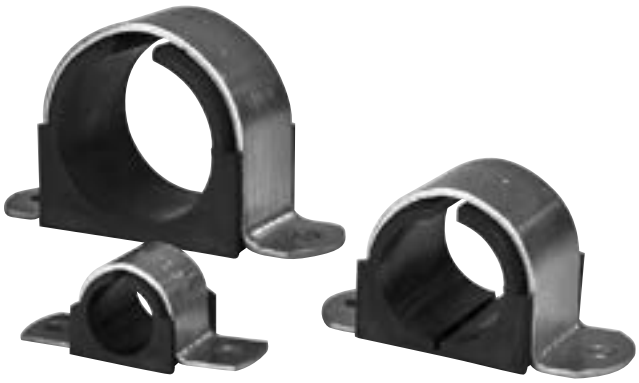

Description

The interlock edge insures that the cushion remains in place. The HOM Series clamp assembly retains, guides, protects and uniformly spaces line runs. They go up fast, lines are rigid, and look neat.

Features

Attached with two standard* fasteners to any flat surface, the HOM Series clamp eliminates the use of special channels, providing savings in both space and cost.

- Low profile for limited space applications.

Materials

The Clamp
Available in steel (with electro-dichromate finish), and 304 stainless steel *(A2 in the model code denotes 304 stainless steel)*.

The Cushion
Manufactured from a thermoplastic elastomer, it's built tough to withstand the effects of most oils, chemical and industrial cleaning compounds, in temperatures from -50°F to 275°F.

*Note: Fasteners not provided.

Model Code

HOM 1/4 T -

Series
HOM

Clamp Size
(Refer to table)

Application
T = Tube
P = Pipe

Metal Components Materials
(omit) = Carbon Stee*l*
A2 = 304 Stainless Steel

Dimensions

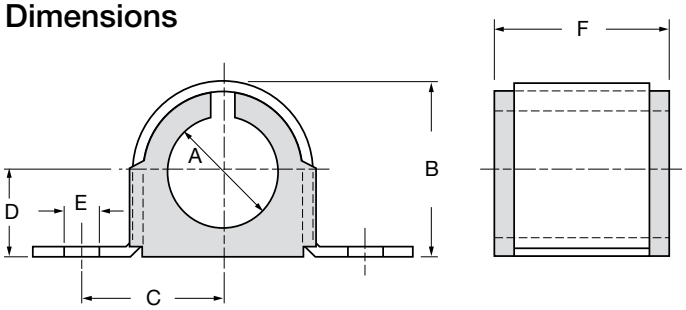

Clamp Size / Application		Dimensions					
Tube O.D.	Pipe	A	B	C	D	E	F
1/4"	-	0.25	0.48	0.60	0.22	0.26	0.78
-	1/4"	0.50	0.81	0.83	0.40	0.26	0.98
3/8"	-	0.37	0.62	0.66	0.31	0.26	0.81
-	3/8"	0.62	0.93	0.85	0.40	0.26	0.98
1/2"	-	0.50	0.81	0.83	0.40	0.26	0.98
-	1/2"	0.87	1.12	1.03	0.53	0.26	0.98
5/8"	-	0.62	0.93	0.85	0.40	0.26	0.98
3/4"	-	0.75	1.02	0.9	0.5	0.26	0.98
-	3/4"	1.05	1.4	1.11	0.7	0.26	0.98
7/8"	-	0.87	1.12	1.03	0.53	0.26	0.98
1"	-	1	1.24	1.04	0.59	0.26	0.98
-	1"	1.31	1.71	1.28	0.81	0.26	1.56
1-1/8"	-	1.12	.1.4	1.17	0.7	0.26	0.98
1-1/4"	-	1.25	1.6	1.2	0.77	0.26	1.56
-	1-1/4"	1.66	2.12	1.55	0.99	0.34	1.56
1-3/8"	-	1.37	1.71	1.28	0.83	0.26	1.56
1-1/2"	-	1.5	1.85	1.36	0.9	0.26	1.56
-	1-1/2"	1.87	2.25	1.64	1.09	0.34	1.56
1-5/8"	-	1.62	1.95	1.43	0.96	0.26	1.56
1-3/4"	-	1.75	2.12	1.55	1.02	0.34	1.56
1-7/8"	-	1.87	2.25	1.64	1.09	0.34	1.56
2"	-	2.87	2.38	1.69	1.15	0.34	1.56
-	2"	2.37	2.88	1.94	1.41	0.34	1.56
2-1/8"	-	2.12	2.62	1.96	1.27	0.34	1.56
2-3/8"	-	2.37	2.88	1.94	1.41	0.34	1.56
5-1/8"	-	5.12	5.82	3.55	2.84	0.43	1.56

Notes:
1. Dimensions are in inches (mm).
2. Dimensions are for general information only, all critical dimensions should be verified by requesting a certified print.

PN#02080105 / 01.17 / ACC1603-1753

CUSH Series
Cushion Clamps

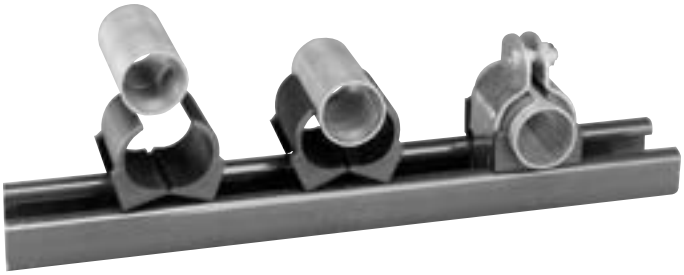

Description

Cushion clamps are ideal for multiple line runs, while absorbing shock and vibration, reducing unwanted noise and preventing galvanic corrosion.

Features

- Distortion free clamping
- Shock and vibration reduction
- Elimination of rotation
- Retrofit without disassembly
- Easy installation
- Control squeeze shoulder bolt prevents over tightening of the clamp assembly, preventing the possibility of crushing the tube.
- Fits standard 1-5/8” wide mounting rail

Materials

- Clamp - carbon steel (with electro-dichromate finish)
- Cushion - thermoplastic elastomer
- Cushion material withstands the effect of most oils, chemicals and industrial cleaning solvents at temperatures -40° to 275°F.

Mounting Rail

- **Part Number:** 02073325
- **Model Code:** Cush Rail 1” x 4’ Galvanized
- **Material:** Low gauge carbon steel
- **Finish:** Galvanized
- **Length:** 4’

Materials

- Clamp - Stainless steel 304
- Cushion - thermoplastic elastomer

Mounting Rail

Part Number:	02701588	2073325
Model Code:	Cush Rail 13/16” x 10’ A2	Cush Rail 1” x 4’
Material:	Stainless steel 304	Galvanized Steel
Length:	10’0”	4’

Model Code

CUSH 1/4 T -

Series
CUSH

Clamp Size
(Refer to table)

Application
T = Tube
P = Pipe

Metal Components Materials
(omit) = Carbon Steel
A2 = 304 Stainless Steel

Dimensions

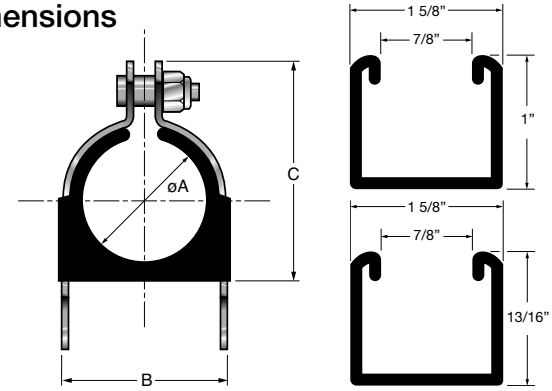

Clamp Size / Application		Dimensions		
Tube O.D.	Pipe	A	B	C
1/4”	-	0.25	0.62	0.98
-	1/4”	0.54	0.98	1.34
3/8”	-	0.37	0.82	1.13
-	3/8”	0.67	1.13	1.54
1/2”	-	0.50	0.94	1.34
-	1/2”	0.84	1.29	1.82
5/8”	-	0.62	1.06	1.54
3/4”	-	0.75	1.2	1.68
-	3/4”	1.05	1.5	1.95
7/8”	-	0.87	1.31	1.82
1”	-	1	1.44	1.95
-	1”	1.31	1.76	2.34
1-1/8”	-	1.12	1.57	2.08
1-1/4”	-	1.25	1.7	2.21
-	1-1/4”	1.66	2.17	2.73
1-3/8”	-	1.37	1.82	2.34
1-1/2”	-	1.5	1.95	2.47
-	1-1/2”	1.9	2.35	2.86
1-5/8”	-	1.62	2.07	2.6
1-3/4”	-	1.75	2.2	2.73
1-7/8”	-	1.87	2.32	2.86
2”	-	2	2.45	3.04
-	2”	2.37	2.82	3.67
2-1/8”	-	2.12	2.57	3.23
2-3/8”	-	2.37	2.82	3.67
2-1/2”	-	2.5	2.94	3.79
-	2-1/2”	2.87	3.32	4.17
2-5/8”	-	2.62	3.07	3.92
2-7/8”	-	2.87	3.32	4.17
3”	-	3.00	3.57	4.42
-	3”	3.50	3.95	4.79
3-1/8”	-	3.12	3.57	4.42
3-5/16”	-	3.31	3.96	4.75
3-1/2”	-	3.50	3.95	4.79
-	3-1/2”	4	4.45	5.11
3-5/8”		3.62	4.2	5.11
4”	-	4	4.45	5.11
-	4”	4.5	4.95	5.92
4-1/8”	-	4.12	4.57	5.54
4-1/2”	-	4.5	4.95	5.92
-	5”	5.56	6.01	6.92
5-1/8”	-	5.12	5.57	6.54
6”	-	6	6.57	7.54
-	6”	6.62	7.07	8.23
6-1/8”	-	6.12	6.57	7.54

Notes:
1. Dimensions are in inches (mm).
2. Dimensions are for general information only, all critical dimensions should be verified by requesting a certified print.

HRBGS Series

Buegu Clamps

Description

Buegu clamps are ideal for mobile applications where space is limited. They absorb shock and vibration, and reduce noise.

Features

- Low Profile Design
- Shock and vibration reduction
- Easy installation

Materials

- Stirrup & Weld Plate - carbon steel
- Clamp Body - thermoplastic elastomer *(Santoprene TPE 73)*

Temp Specifications

- -40° to 257°F (-40° to 125°C)

Model Code

HRBGS 1 A D1-D2 ST M

Series
HRBGS

Clamp Size
0A - 3 *(Refer to table)*

Application
A = Buegu clamp with top plate & weld plate
A1 = Buegu clamp without weld plate
A1TM = C-rail mounted Buegu clamp

Bore Size
(Refer to table)

Metal Components Materials
(omit) = Carbon Steel
A2 = 304 Stainless Steel

Thread Type
M = Metric

Part Legend	A - Buegu Clamp with Weld Plate
1. Hex Head Bolt	
2. Stirrup	
3. Sleeve	
4. Rubber Body	
5. Weld Plate	

Part Legend	A1 - Buegu Clamp without Weld Plate
1. Hex Head Bolt	
2. Stirrup	
3. Sleeve	
4. Rubber Body	

Part Legend	A1TM - Buegu Clamp - C-Rail Mounted
1. Hex Head Bolt	
2. Stirrup	
3. Sleeve	
4. Rubber Body	
5. C-Rail Nut	
6. C-Rail	

Dimensions
HRBGS Series

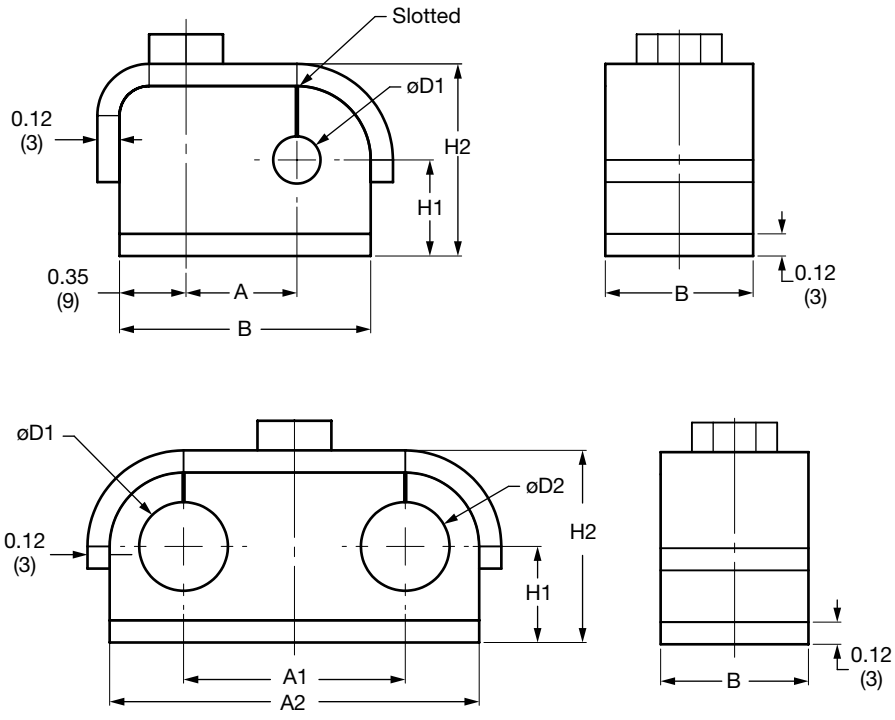

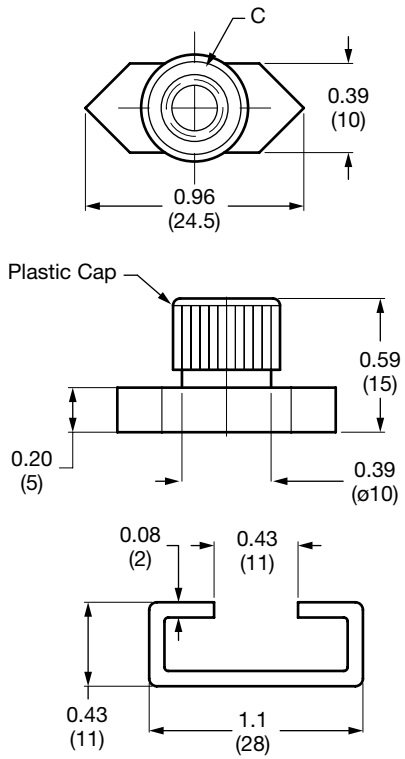

Clamp Size	Tube O.D.	Pipe Size	Bore Diameter*		Dimensions					Bolt Size C
			øD1	øD2	A1	A2	H1	H2	B	
0A	1/4”	-	0.25 (6.4)	-	0.56 (15)	1.34 (34)	0.39 (10)	0.91 (23)	0.78 (20)	M6 X 25
	3/8”	-	0.375 (9.5)	-						
	-	1/8”	0.394 (10.0)	-						
0B	1/2”	-	0.5 (12.7)	-	0.71 (18)	1.54 (39)	0.47 (12)	1.03 (27)		
	-	1/4”	0.54 (13.7)	-						
	5/8”	-	0.625 (16.0)	-						
	-	3/8”	0.675 (17.1)	-						
	3/4”	-	0.75 (19.0)	-						
0C	-	1/2”	0.84 (21.3)	-	0.93 (23.5)	2.26 (57.5)	0.78 (20)	1.69 (43)	1.18 (30)	M8 X 45
	1”	-	1.0 (25.4)	-						
	1-1/4”	-	1.26 (32.0)	-						
1	1/4”	-	0.25 (6.4)	0.25 (6.4)	1.18 (30)	1.97 (50)	0.39 (10)	0.91 (23)	0.78 (20)	M6 X 25
	3/8”	-	0.375 (9.5)	0.375 (9.5)						
	-	1/8”	0.394 (10.0)	0.394 (10.0)						
	1/2”	-	0.5 (12.7)	0.5 (12.7)						
2	5/8”	-	0.625 (16.0)	0.625 (16.0)	1.38 (35)	2.32 (59)	0.47 (12)	1.03 (27)		
	-	3/8”	0.675 (17.1)	0.675 (17.1)						
	3/4”	-	0.75 (19.0)	0.75 (19.0)						
3	-	1/2”	0.84 (21.3)	0.84 (21.3)	1.85 (47)	3.39 (86)	0.78 (20)	1.69 (43)	1.18 (30)	M8 X 45
	1”	-	1.0 (25.4)	1.0 (25.4)						
	1-1/4”	-	1.260 (32.0)	1.26 (32.0)						

* Consult factory for sizes 1 and 2 with different bore diameters.
Notes:
1. Dimensions are in inches (mm).
2. Dimensions are for general information only, all critical dimensions should be verified by requesting a certified print.

HRRBS Series

U-Bolt Clamps

Model Code

HRRBS 10 L 139.7 PP ST ZN

Series
HRRBS

Family Group
1-23 *(Refer to table)*

Model

Clamp Size
(Refer to table)

Clamp Material
PP = Polypropylene *(Standard)*
PA = Polyamide

Metal Component Material
ST = Carbon Steel
A2 = 304 Stainless Steel
A4 = 316 Stainless Steel

Material Finish
Zn = Zinc Plated

Description

U-bolt clamps are a simple solution for securing pipes and other cylindrical objects. The clamps consist of a threaded "U" and a contoured saddle.

Features

- Metric Threads
- Easy installation

Materials

- Threaded "U" - zinc-plated carbon steel
- Saddle - polypropylene

Dimensions

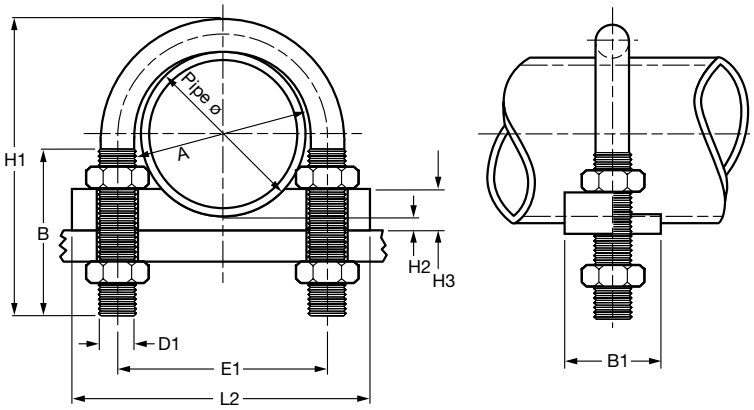

Group	Clamp Size	Pipe Size	øA	B	D1	E1	H1	H2	H3	L2	B1
1	0.67 (17.1) 0.84 (21.3)	3/8 (9.5) 1/2 (12.7)	0.91 (23)	1.57 (40)	M10	1.3 (33)	2.56 (65)			2.36 (60)	0.98 (25)
2	1.06 (26.9)	3/4 (19.1)	1.18 (30)			1.57 (40)	2.76 (70)			2.95 (75)	1.18 (30)
3	1.33 (33.7)	1 (25.4)	1.5 (38)			1.89 (48)	2.95 (75)			3.15 (80)	
4	1.67 (42.4)	1-1/4 (31.8)	1.81 (46)	1.97 (50)		2.2 (56)	3.39 (86)			3.54 (90)	
5	1.9 (48.3)	1-1/2 (38.1)	2.05 (52)			2.44 (62)	3.62 (92)			3.74 (95)	1.38 (35)
6	2.37 (60.3)	2 (50.8)	2.52 (64)	2.36 (60)	M12	2.99 (76)	4.29 (109)			4.33 (110)	
7	3 (76.1)	-	3.23 (82)			3.7 (94)	4.92 (125)			5.31 (135)	
8	3.5 (88.9)	3 (76.2)	3.7 (94)			4.17 (106)	5.43 (138)			5.71 (145)	1.77 (45)
9	4.5 (114.3)	4 (101.6)	4.72 (120)	3.15 (80)	M16	5.35 (136)	6.73 (171)			7.48 (190)	
10	5.5 (139.7)	5 (127)	5.83 (148)			6.46 (164)	7.52 (191)			8.66 (220)	
11	6.63 (168.3)	6 (152.4)	6.93 (176)			7.56 (192)	8.54 (217)			9.84 (250)	1.97 (50)
12	7.63 (193.7)	7 (177.8)	7.95 (202)			8.58 (218)	9.8 (249)			10.63 (270)	
13	8.63 (219.1)	8 (203.2)	8.98 (228)	3.94 (100)	M20	9.76 (248)	11.14 (283)			12.4 (315)	
14	10.75 (273)	10 (254)	11.1 (282)			11.89 (302)	13.15 (334)			14.57 (370)	
15	12.75 (323.9)	12 (304.8)	13.07 (332)			13.86 (352)	15.16 (385)			16.54 (420)	2.36 (60)
16	14 (355.6)	14 (355.6)	14.88 (378)		M24	15.83 (402)	17.13 (435)			18.9 (480)	
17	16 (406.4)	16 (406.4)	16.85 (428)			17.8 (452)	19.17 (487)			21.26 (540)	
18	20 (508)	20 (508)	20.87 (530)			21.81 (554)	23.19 (589)			25.2 (640)	
19	21.97 (558)	22 (558.8)	22.44 (570)	5.91 (150)	M30	23.62 (600)	25.59 (650)			27.56 (700)	2.76 (70)
20	23.98 (609)	24 (609.6)	24.49 (622)			25.67 (652)	27.56 (700)			29.53 (750)	
21	25.98 (660)	26 (660.4)	26.77 (680)			27.95 (710)	29.92 (760)			31.89 (810)	
22	27.99 (711)	28 (711.2)	28.74 (730)			29.92 (760)	31.89 (810)			34.25 (870)	
23	30 (762)	30 (762)	30.91 (785)			32.09 (815)	34.25 (870)			35.83 (910)	

Notes:
1. Dimensions are in inches (mm).
2. Dimensions are for general information only, all critical dimensions should be verified by requesting a certified print.

HUB Series

U-Bolt with Cushion Clamps

Description

Designed for the tough jobs, the HUB Series secures pipe runs to any flat surface. The U-Bolt traps and secures the cushion in place to prevent lateral movement, while nylon insert locknuts provide a positive lock.

Features

The cushion design provides total load distribution, allowing the U-Bolt to become a full contact hanger, eliminating knife-edge loading. Extremely cost effective, especially in larger sizes.

Materials

- U-Bolt - Steel with electro-galvanized finish or 316 stainless steel*
- Cushion - Thermoplastic elastomer, rated from -50˚ to 275˚F

Model Code

HUB 1/4 P -

Series
HUB

Clamp Size
(Refer to table)

Application
P = Pipe

Metal Components Materials
(omit) = Carbon Steel
A4 = 316 Stainless Steel

Dimensions

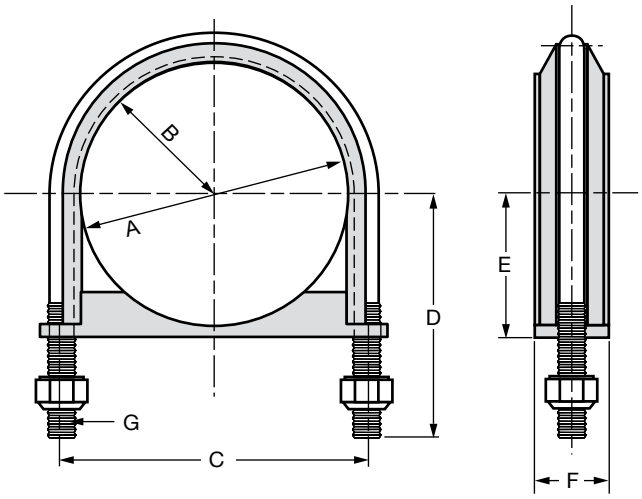

Clamp Size	Pipe Size	øA	B	C	D	E	F	G
1/2	1/2	0.84	0.80	1.60	1.50	0.67	0.68	1/4-20 UNC-2B
3/4	3/4	1.05	0.90	1.80	1.60	0.78	0.68	
1	1	1.31	1.02	2.05	1.70	0.91	0.68	
1-1/4	1-1/4	1.66	1.27	2.55	2.10	1.08	1.24	3/8-16 UNC-2B
1-1/2	1-1/2	1.90	1.40	2.80	2.20	1.19	1.24	
2	2	2.37	1.67	3.35	2.5	1.45	1.24	
2-1/2	2-1/2	2.87	1.95	3.90	3.00	1.69	1.24	1/2-13 UNC-2B
3	3	3.5	2.27	4.55	3.3	2	1.24	
3-1/2	3-1/2	4	2.52	5.05	3.7	2.25	1.24	
4	4	4.5	2.75	5.5	3.9	2.5	1.24	
5	5	5.56	3.25	6.56	4.5	3.03	1.24	
6	6	6.62	3.87	7.75	5.4	3.56	1.44	5/8-11 UNC-2B
8	8	8.82	4.85	9.82	6.4	4.56	1.44	
10	10	10.75	6.08	12.16	7.7	5.68	1.65	3/4-10 UNC-2B
12	12	12.75	7.13	14.25	8.7	6.68	1.65	

Notes:
1. Dimensions are in inches (mm).
2. Dimensions are for general information only, all critical dimensions should be verified by requesting a certified print.

HROS Series

Oval Clamps

Description

Oval clamps are ideal for mobile applications where space is limited. One-piece, hinged polypropylene clamp body.

Features

- Low profile design
- Easy installation

Materials

- PP - Polypropylene *(standard)*
- PA or others may be available

Temp Specifications

Polypropylene: -22° to 194°F (-30° to 90°C)

Polyamide: 40° to 248°F (-40° to 120°C)

Model Code

HROS 3 KP 12.7 - 12.7 PP

Series
HROS

Clamp Size
0A to 4 *(Refer to table)*

Clamp Body

Bore Diameter *(in/mm)*
(Refer to table)

Clamp Material
PP = Polypropylene
PA = Polyamide

Dimensions

Size 0

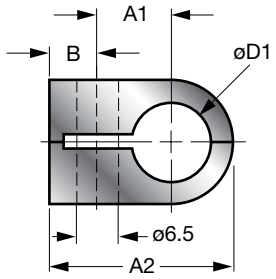

Size 1-4

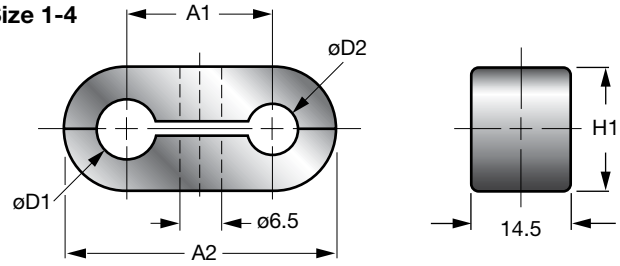

Clamp Size	øD1 & øD2 Bore Size*	Nominal Size		Dimensions			
		Tube O.D.	Pipe	A1	A2	B	H1
0A	0.24 (6.0)	-	-	0.35 (9)	0.9 (22.8)	0.28 (7)	0.53 (13.5)
	0.25 (6.4)	1/4”	-				
1	0.31 (8.0)	5/16”	-	0.7 (18)	1.26 (32)	-	
0B	0.31 (8.0)	5/16”	-	0.43 (11)	1.07 (27.2)	0.28 (7)	0.73 (18.5)
	0.37 (9.5)	3/8”	-				
	0.39 (10.0)	-	-				
2	0.40 (10.2)	-	1/8”	0.87 (22)	1.59 (40.5)	-	
	0.47 (12.0)	-	-				
	0.50 (12.7)	1/2”	-				
0C	0.39 (10.0)	-	-	0.59 (15)	1.32 (33.5)	0.28 (7)	0.93 (23.6)
	0.40 (10.2)	-	1/8”				
	0.47 (12.0)	-	-				
	0.50 (12.7)	1/2”	-				
3	0.53 (13.5)	-	1/4”	1.81 (30)	2.11 (53.6)	-	
	0.55 (14.0)	-	-				
	0.59 (15.0)	-	-				
	0.63 (16.0)	5/8”	-				
0D	0.55 (14.0)	-	-	0.75 (19)	1.57 (40)	0.24 (6)	1.2 (30.6)
	0.59 (15.0)	-	-				
	0.63 (16.0)	5/8”	-				
	0.68 (17.2)	-	3/8”				
	0.71 (18.0)	-	-				
	0.75 (19.0)	3/4”	-				
4	0.79 (20.0)	-	-	1.5 (38)	2.69 (68.3)	-	
	0.84 (21.3)	-	1/2”				
	0.87 (22.0)	7/8”	-				
	0.98 (25.0)	-	-				
	1.00 (25.4)	1”	-				

*D1 and D2 dimensions may have different bore sizes.
Dimensions listed are standard.

Notes:
1. Dimensions are in inches (mm).
2. Dimensions are for general information only, all critical dimensions should be verified by requesting a certified print.

HSPN & HSPW Series

"P" Style Clamps

Description

P style clamp used for mounting a multitude of light duty applications including cables, pneumatic lines, and conduit.

Features

HSPN clamps provide electrical insulation and vibration absorption.

Materials

- EPDM cushion
- Steel clamps are zinc electroplated for corrosion resistance
- Color- Silver with black EPDM cushion
- The A2 in the model code denotes 304 stainless steel

Dimensions

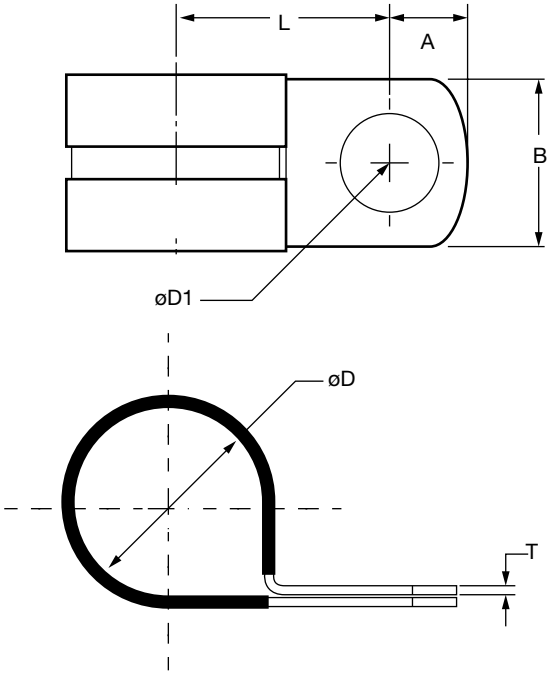

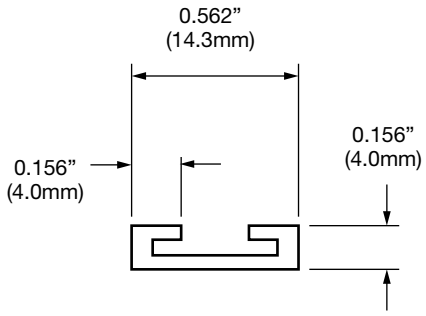

Model Code

HSPN 10 _

Series
HSPN = 1/2" wide
HSPW = 3/4" wide

Clamp Size
(Refer to table)

Metal Components Materials
(omit) = Carbon Steel
A2 = 304 Stainless Steel *(HSPN only)*

Dimensions HSPN

Clamp Size	Holding Diameter ØD	L	ØD1	A	B	T
3	3/16" (4.8)	3/8" (9.5)	0.26 (6.6)	0.26 (6.6)	0.50 (12.7)	0.03 (0.8)
4	1/4" (6.4)	13/32" (10.3)				
5	5/16" (7.9)	7/16" (11.1)				
6	3/8" (9.5)	15/32" (11.9)				
7	7/16" (11.1)	1/2" (12.7)				
8	1/2" (12.7)	17/32" (13.5)				
9	9/16" (14.3)	9/16" (14.3)				
10	5/8" (15.9)	19/32" (15.1)				
11	11/16" (17.5)	5/8" (15.9)				
12	3/4" (19.1)	3/4" (19.1)				
14	7/8" (22.2)	13/16" (20.6)				
16	1" (25.4)	7/8" (22.2)				
18	1-1/8" (28.6)	15/16" (23.8)				
20	1-1/4" (31.8)	1" (25.4)				
22	1-3/8" (34.9)	1-5/32" (29.3)				
24	1-1/2" (38.1)	1-7/32" (30.9)				
26	1-5/8" (41.3)	1-9/32" (32.5)				
28	1-3/4" (44.5)	1-11/32" (34.1)				
30	1-7/8" (47.6)	1-13/32" (35.7)				
32	2" (50.8)	1-15/32" (37.2)				
34	2-1/8" (54.0)	1-17/32" (38.8)				
40	2-1/2" (63.5)	1-23/32" (43.6)				
48	3" (76.2)	1-31/32" (50.1)				

Dimensions HSPW

Clamp Size	Holding Diameter ØD	L	ØD1	A	B	T
4	1/4" (6.4)	21/32" (16.7)	0.41 (10.3)	0.31 (8)	0.75 (19.1)	0.03 (0.8)
6	3/8" (9.5)	23/32" (18.2)				
7	7/16" (11.1)	24/32" (18.5)				
8	1/2" (12.7)	25/32" (19.8)				
9	9/16" (14.3)	13/16" (20.6)				
10	5/8" (15.9)	27/32" (21.4)				
12	3/4" (19.1)	29/32" (23.0)				
14	7/8" (22.2)	31/32" (24.6)				
16	1" (25.4)	1-1/32" (26.2)				
18	1-1/8" (28.6)	1-3/32" (27.8)				0.05 (1.3)

Notes:
1. Dimensions are in inches (mm).
2. Dimensions are for general information only, all critical dimensions should be verified by requesting a certified print.

HSVW & HLVZ Series

"P" Style Loop Clamps (Vinyl Dipped Galvanized Steel)

Description

"P" style clamp used for mounting a multitude of light duty applications including cables, pneumatic lines, and conduit.

Materials

- PVC coated
- Steel clamps are galvanized for corrosion resistance
- Color- Silver with black

Model Code

HSVW - 10

Series
HSVW = 3/4" wide
HLVZ = 1" wide

Clamp Size
(Refer to table)

Dimensions

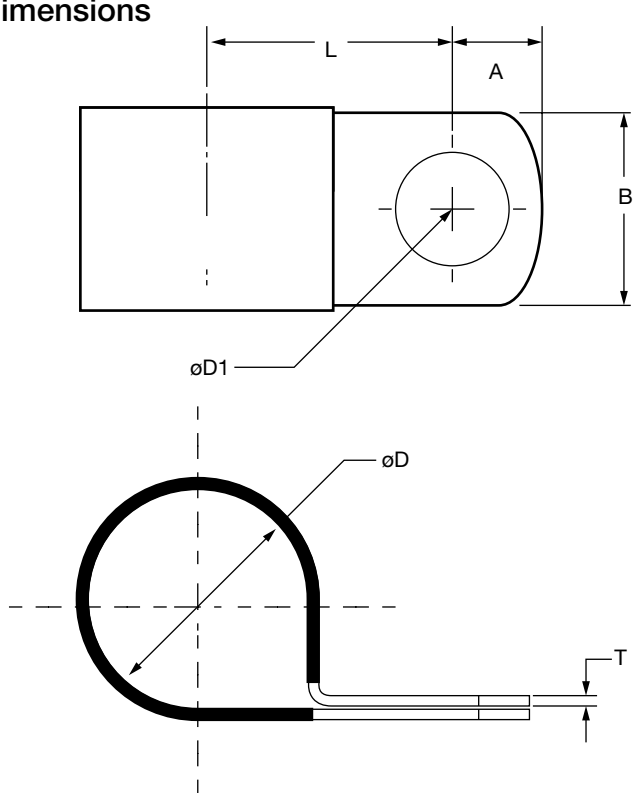

Dimensions HSVW

Size	Holding Diameter ØD	L	øD1	A	B	T
3	3/16" (4.8)	5/8" (15.9)	0.41 (10.3)	0.31 (8)	0.75 (19.1)	0.03 (0.8)
4	1/4" (6.4)	21/32" (16.7)				
5	5/16" (7.9)	9/16" (14.3)				
6	3/8" (9.5)	23/32" (18.2)				
7	7/16" (11.1)	3/4" (19.1)				0.05 (1.3)
8	1/2" (12.7)	25/32" (19.8)				
9	9/16" (14.3)	13/16" (20.6)				
10	5/8" (15.9)	27/32" (21.4)				
11	11/16" (17.5)	7/8" (22.2)				
12	3/4" (19.1)	29/32" (23.0)				
13	13/16" (20.6)	15/16" (23.8)				
14	7/8" (22.2)	31/32" (24.6)				
15	15/16" (23.8)	1" (25.4)				
16	1" (25.4)	1-1/32" (26.2)				
17	1-1/16" (26.9)	1-1/16" (26.9)				
18	1-1/8" (28.6)	1-3/32" (27.8)				
22	1-3/8" (34.9)	1-7/32" (30.9)				

Dimensions HLVZ

Size	Holding Diameter ØD	L	øD1	A	B	T
18	1-1/8" (28.7)	1-7/32" (30.9)	0.53 (13.5)	0.56 (14.3)	1.00 (25.4)	0.05 (1.3)
19	1-3/16" (30.2)	1-1/4" (31.8)				
20	1-1/4" (31.8)	1-9/32" (32.5)				
21	1-5/16" (33.3)	1-5/16" (33.3)				
24	1-1/2" (38.1)	1-13/32" (35.7)				
25	1-9/16" (39.6)	1-7/16" (36.5)				
28	1-3/4" (44.5)	1-17/32" (38.9)				
29	1-13/16" (46.0)	1-9/16" (39.6)				
32	2" (50.8)	1-11/16" (42.8)				
33	2-1/16" (52.3)	1-23/32" (43.6)				
36	2-1/4" (57.2)	1-13/16" (46.0)				
40	2-1/2" (63.5)	1-15/16" (49.2)				
42	2-5/8" (66.8)	2" (50.8)				
44	2-3/4" (69.9)	2-1/16" (52.3)				
46	2-7/8" (73.1)	2-1/4" (57.2)				
57	3-9/16" (90.4)	2-7/16" (61.9)				

Notes:
1. Dimensions are in inches (mm).
2. Dimensions are for general information only, all critical dimensions should be verified by requesting a certified print.

PN#02080105 / 01.17 / ACC1603-1753

HRGKSM Series

Quick Release Swivel Bolt Clamps

Model Code

HRGKSM 2 R 186-194 192 ST

Series
HRGKSM

Group
0-4 *(Refer to table)*

Model
R

Diameter Range
(Refer to table)

Type
(Refer to table)

Material of Steel Part
ST = Zinc Plated Steel

Description

The HRGKS is a clamp designed to mount cylindrical components. It is similar to the HYDAC HYRAC clamp, which is designed for accumulators, with some additional benefits that make it more practical for non-accumulator applications.

Features

- Swivel assembly provides for simple installation and a tight fit
- Support base provides easy access to bolts / unit easy to install
- The clamp rotates ~270°F / Easy access
- Polyethylene profile does not compress
  Clamp stays tight over time

HRGKSM vs. HYRAC*

Difference	HRGKSM	HYRAC
Profile Material	Polyethylene	Rubber
Capability to Rotate	Can be rotated 270°F	Fixed at 90°F
Fit in clamp	Component sits flat	Two nubs ensure H dimension is consistent with other HYDAC Accumulator Clamps

*HYRAC clamp sizes 96-100 and under have the same construction as the HRGKSM Series

Materials

Description	Material / Coating
Support Base	Zinc Plated Steel
Polyethylene Profile	Polyethylene
Quick Release Swivel Bolt	Zinc-Plated Steel
Band Strap	Stainless Steel

Also available in all stainless steel

Dimensions

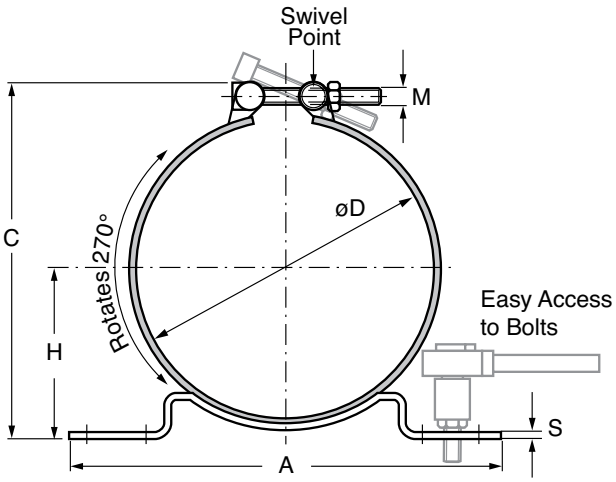

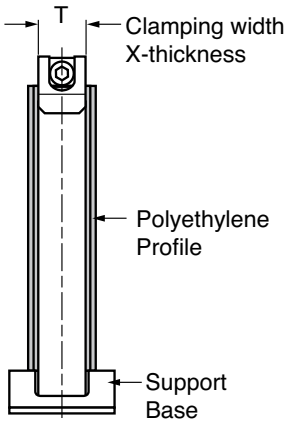

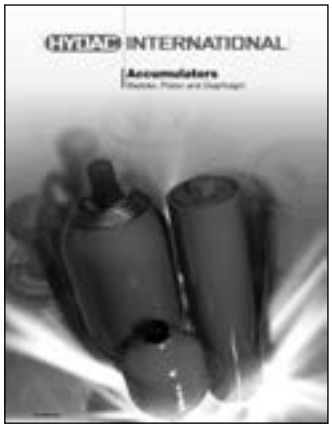

For more detailed information on the HYRAC Clamps please refer to the HYDAC Accumulator Catalog

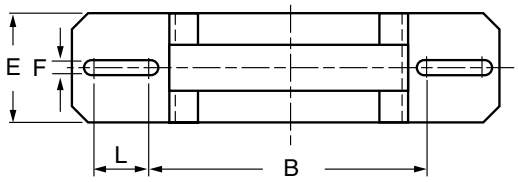

(See chart next page for dimensional measurements.)

Dimensions
HRGKSM Series *(see illustration previous page)*

Group	Diameter Range	Type	Dimensions										Weight
			H	CMAX	A	S	L	B	E	F	M	T	
0	1.7-1.8 (44-46)	47	1.2-1.3 (29.8-32.3)	2.6 (67)	4.72 (120)	0.12 (3)	.31 (8)	3.35 (85)	1.57 (40)	0.35 (9)	M6 x 50	0.8 x .03 (20 x 0.8)	.33 (0.15)
	1.8-1.9 (46-49)	50	1.2-1.3 (30.8-32.3)	2.7 (69)									.33 (0.15)
	2.0-2.1 (51-54)	55	1.3-1.4 (33.3-34.8)	2.9 (75)									.33 (0.15)
	2.2-2.3 (55-58)	59	1.4-1.5 (35.3-36.8)	3.0 (77)									.35 (0.16)
	2.3-2.4 (58-61)	62	1.5 (37.3-38.8)	3.3 (83)									.35 (0.16)
	2.4-2.6 (62-65)	65	.3-1.6 (8.0-39.5)	3.4 (85)									.44 (0.20)
	2.6-2.7 (66-69)	69	1.6 (40.0-41.5)	3.5 (89)									.46 (0.21)
	2.8-2.9 (70-73)	73	1.7 (42.0-43.5)	3.7 (93)									.46 (0.21)
	2.9-3.0 (73-76)	76	1.7-1.8 (43.5-45.0)	3.8 (96)									.48 (0.22)
	3.0-3.1 (77-80)	80	1.8-1.9 (45.5-47.0)	3.9 (100)									.48 (0.22)
	3.2-3.3 (81-84)	85	1.9 (47.0-48.5)	4.1 (104)									.51 (0.23)
	3.3-3.5 (85-88)	89	1.9-2.0 (49.0-50.5)	4.3 (108)									.51 (0.23)
	3.5-3.6 (89-92)	9	2.0-2.1 (51.0-52.5)	4.4 (112)									.53 (0.24)
	3.6-3.7 (92-95)	96	2.1 (52.5-54.0)	4.5 (115)									.53 (0.24)
	3.7-3.9 (95-100)	100	2.1-2.2 (54.5-56.5)	4.7 (120)									.53 (0.24)
1	4.0-4.3 (101-109)	106	2.3-2.5 (58.5-62.5)	5.4 (137)	6.14 (156)	0.12 (3)	0.71 (18)	3.94 (100)	1.97 (50)	0.35 (9)	M8 x 80	1.0 x .03 (25 x 1.0)	.75 (0.34)
	4.3-4.6 (110-118)	115	2.5-2.6 (63.0-67.0)	5.7 (146)									.77 (0.35)
	4.7-5.0 (119-127)	124	2.6-2.8 (66.8-70.8)	6.1 (154)									.79 (0.36)
	5.0-5.4 (128-136)	133	2.8-3.0 (71.3-75.3)	6.4 (163)									.82 (0.37)
	5.4-5.7 (137-145)	142	3.0-3.1 (76.0-80.0)	6.8 (172)									.84 (0.38)
	5.7-6.1 (146-154)	151	3.2-3.3 (80.5-84.5)	7.1 (181)									.86 (0.39)
	6.1-6.4 (155-163)	160	3.3-3.5 (85.0-89.0)	7.5 (190)									.88 (0.40)
2	6.4-6.7 (163-171)	169	3.5-3.7 (90.1-94.1)	7.9 (200)	9.30 (236)	0.12 (3)	1.26 (32)	5.98 (152)	2.36 (60)	0.35 (9)	M8 x 80	1.0 x .03 (25 x 1.0)	1.26 (0.57)
	6.6-6.9 (167-175)	173	3.6-3.8 (92.1-96.1)	8.0 (204)									1.28 (0.58)
	6.8-7.1 (172-180)	178	3.7-3.9 (94.6-98.6)	8.2 (209)									1.28 (0.58)
	7.1-7.4 (181-189)	187	3.9-4.0 (98.4-102.4)	8.5 (217)									1.30 (0.59)
	7.3-7.6 (186-194)	192	4.0-4.1 (100.9-104.9)	8.7 (222)									1.32 (0.60)
	7.5-7.8 (190-198)	196	4.1-4.2 (102.9-106.9)	8.9 (226)									1.32 (0.60)
	7.8-8.1 (199-207)	205	4.2-4.4 (107.4-111.4)	9.2 (235)									1.34 (0.61)
	8.2-8.5 (208-216)	214	4.4-4.5 (111.2-115.2)	9.6 (243)									1.37 (0.62)
	8.5-8.9 (217-225)	223	4.6-4.7 (115.7-119.7)	9.9 (252)									1.39 (0.63)
	8.9-9.2 (226-234)	231	4.7-4.9 (120.2-124.2)	10.3 (261)									1.41 (0.64)
3	9.3-9.7 (235-246)	243	5.1-5.3 (129.0-134.5)	11.0 (279)	11.81 (300)	0.16 (4)	1.26 (32)	8.43 (214)	2.36 (60)	0.43 (11)	M10 x 90	1.2 x .03 (30 x 1.0)	2.14 (0.97)
	9.8-10.2 (24-259)	256	5.3-5.6 (135.5-141.0)	11.5 (292)									2.18 (0.99)
	10.3-10.7 (261-272)	269	5.5-5.8 (140.9-146.4)	12.0 (304)									2.20 (1.00)
	10.7-11.2 (271-285)	282	5.8-6.0 (147.4-152.9)	12.5 (317)									2.25 (1.02)
	11.3-11.7 (287-298)	295	6.1-6.3 (153.9-159.4)	13.0 (330)									2.27 (1.03)
	11.8-12.2 (300-311)	308	6.3-6.5 (159.4-164.9)	13.5 (342)									2.31 (1.05)
	12.3-12.6 (313-324)	321	6.5-6.7 (165.9-171.4)	14.0 (355)									2.34 (1.06)
	12.8-13.3 (326-337)	334	6.8-7.0 (172.4-177.9)	14.5 (368)									2.38 (1.08)
4	13.3-13.8 (339-350)	347	7.1-7.4 (181.2-186.7)	15.2 (385)	15.75 (400)	0.16 (4)	1.26 (32)	12.36 (314)	2.36 (60)	0.43 (11)	M10 x 90	1.2 x .06 (30 x 1.5)	3.24 (1.47)
	13.9-14.3 (352-363)	360	7.4-7.6 (187.7-193.2)	15.7 (398)									3.28 (1.49)
	14.4-14.8 (365-376)	373	7.6-7.9 (194.2-199.7)	16.2 (411)									3.33 (1.51)
	14.9-15.3 (378-389)	386	7.9-8.1 (200.7-206.2)	16.7 (424)									3.35 (1.52)
	15.4-15.8 (391-402)	399	8.1-8.3 (205.2-210.7)	17.1 (435)									3.40 (1.54)
	15.9-16.3 (404-415)	412	8.3-8.6 (211.7-217.2)	17.6 (448)									3.44 (1.56)
	16.4-16.8 (417-428)	425	8.6-8.8 (218.2-223.7)	18.1 (461)									3.48 (1.58)
	16.9-17.4 (430-441)	438	8.8-9.1 (224.7-230.2)	18.7 (474)									3.53 (1.60)
	17.4-17.9 (443-454)	451	9.0-9.2 (229.4-234.9)	19.1 (485)									3.57 (1.62)
	18.0-18.4 (456-467)	464	9.3-9.5 (235.9-241.4)	19.6 (498)									3.60 (1.63)
	18.5-18.9 (469-480)	477	9.5-9.8 (242.4-247.9)	20.1 (511)									3.64 (1.65)
	19.0-19.4 (482-493)	490	9.8-10.0 (248.9-254.4)	20.6 (524)									3.68 (1.67)
	19.5-19.9 (495-506)	503	10.1-10.3 (255.4-260.9)	21.1 (537)									3.75 (1.70)

Notes:
1. Dimensions are in inches (mm) and lbs (kg).
2. Dimensions are for general information only, all critical dimensions should be verified by requesting a certified print.
3. For larger sizes contact HYDAC Accessories Group

B3

Custom Clamps

HYDAC offers customized series strips and tank mounting band strap solutions for OEM's requiring multiple line runs. In addition we provide a rugged, high durability power cable harness for cable management requirements.

HRRL & HRRLE Series

Series Strip Clamps

Description

For OEM's requiring solutions for multiple line runs HYDAC offers customized series strips. These clamps reduce inventory and installation time, while providing a more compact solution than multiple DIN 3015 clamps. The design and dimensions are based on the DIN 3015 specifications set forth for single and twin clamps. The Series Strip Program, echoes that of the DIN 3015 Clamps in that it offers similar arrangements, sizes, options, and model coding.

Arrangements

HRRL Series: Standard Duty

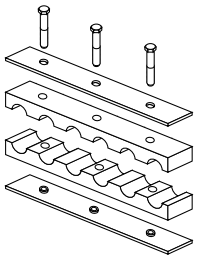

Weld Plate Mounting

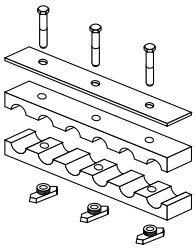

C-Rail Mounting

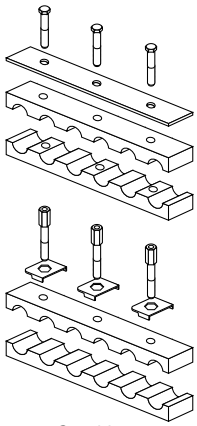

Stacking

Arrangements

HRRLE Series: Heavy Duty with Rubber Inserts

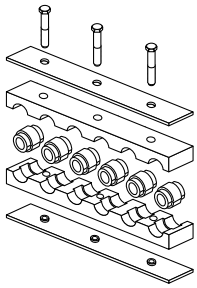

Weld Plate Mounting

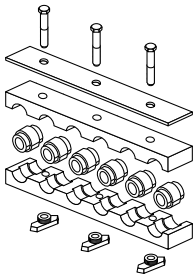

C-Rail Mounting

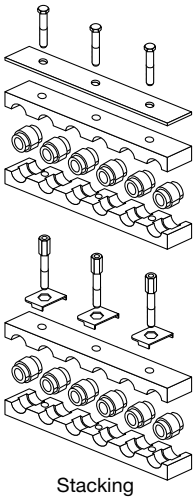

Stacking

Number of Lines & Bolts

HRRL Series: Standard Duty
(diameter range: 6 to 25.4 mm)

2 Lines / 2 Bolts (HRRL...2 X.../2...)

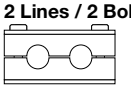

3 Lines / 2 Bolts (HRRL...3 X.../2...)

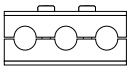

4 Lines / 2 Bolts (HRRL...4 X.../2...)

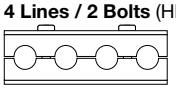

4 Lines / 3 Bolts (HRRL...4 X.../3...)

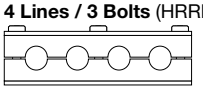

6 Lines / 3 Bolts (HRRL...6 X.../3...)

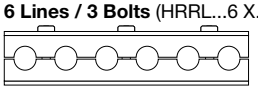

10 Lines / 5 Bolts (HRRL...10 X.../5...)

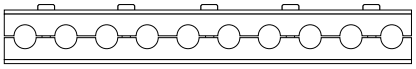

Number of Lines & Bolts

HRRLE Series: Heavy Duty with Rubber Inserts
(diameter range: 6 to 56.4 mm)

2 Lines / 1 Bolt (HRRLE...2 X.../1...)

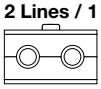

2 Lines / 2 Bolts (HRRLE...2 X.../2...)

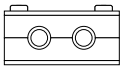

3 Lines / 2 Bolts (HRRLE...3 X.../2...)

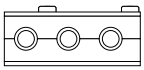

4 Lines / 2 Bolts (HRRLE...4 X.../2...)

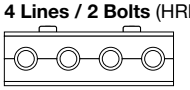

4 Lines / 3 Bolts (HRRLE...4 X.../3...)

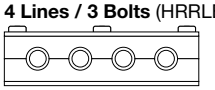

6 Lines / 3 Bolts (HRRLE...6 X.../3...)

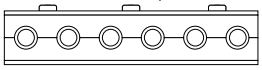

Ordering

Series Strip Clamps are a custom product which must be quoted on an individual project basis. As with DIN 3015 Clamps, the Series Strip Clamps can be ordered as complete arrangements or as individual components. Series Strip Clamps are available with differing bore sizes. Contact **HYDAC** at **1.877.GO.HYDAC** *(1.877.464.9322)* with your specifications to request a quotation.

HY-ROFLEX Series
Power Cable Clamps

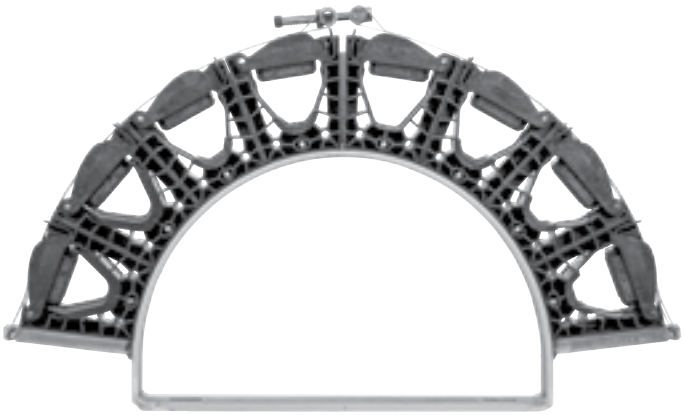

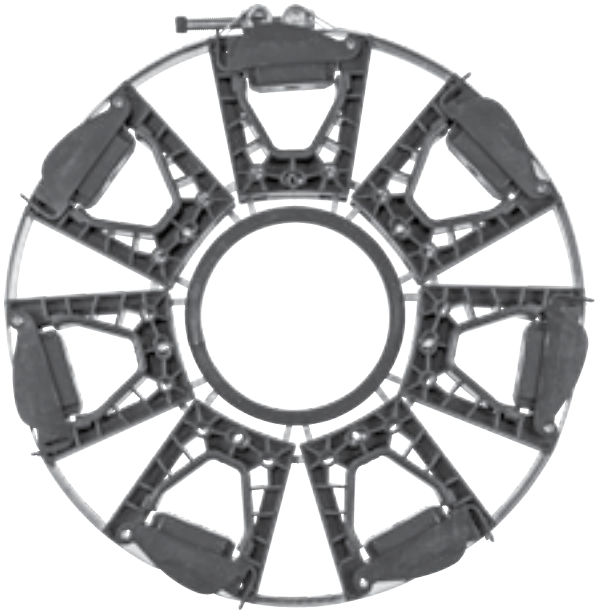

Description

Up until now, installing and maintaining power cables has been a costly and time consuming procedure. With the development of the HY-ROFLEX, HYDAC shows how it should be done. This innovative design for supporting power cables simplifies both installation and replacement considerably. Being modular, the installation system saves the manufacturer and the operator time and money.

The new development is an extremely flexible and professional solution for quick and easy installation.

The flexible design of the individual segments which secure the cables harnesses opens up numerous possibilities for combining different types, quantities and configurations *(individual cables, bundles of three)* of power cables. Thanks to the excellent accessibility of individual cables, even when replacing cables, “one click” per segment is all that is required. Opening and closing the clamping band is equally simple.

Features

- Quick and easy installation of power cables “one click”
- Non-damaging and secure clamping of the power cable
- HR-ROS clamping bands provide a secure hole in the event of a short circuit.
- Ensures easy maintenance due to clear distribution of cable bundles and excellent accessibility to individual cables.
- Quick replacement
- Up to 27 power cables *(max. 9 segments with 3 cables in each)* can be installed in modular or flexible combinations of clamps segments
- Compensation of manufacturing tolerances in the cables achieved by means of spring-action fastening.

Segments and Inserts

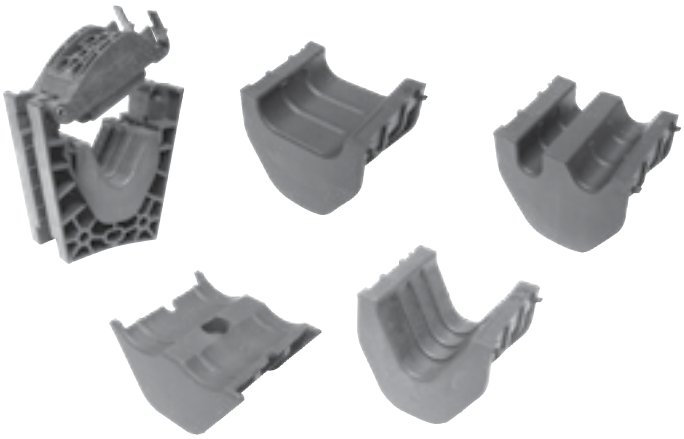

Technical Specification

Diameter

Variable to suit all commonly-used cable diameters up to ø73 mm (individual cables)

Materials

PPVO

HY-ROFLEX Clamping band in stainless steel

HY-ROS Support set in zinc-plated steel

Temperature range

-40°F (functional) up to +194°F

Subject to technical modifications

HY-ROFLEX

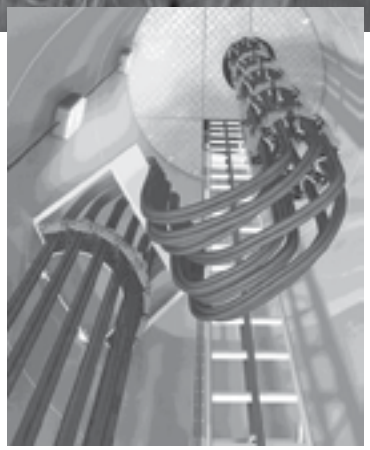

HR(S)GBLPU Series

Swivel Bolt Band Clamps

Description

For OEM's requiring mounting solutions to secure non-cylindrical objects such as plastic fuel tanks, HYDAC offers steel band straps.

Item	Description/Material
1	Clamping Band, Stainless Steel
2	Metric Zinc-Plated Steel Socket Head Bolts *(Note: other bolt and connection styles are available based on customer's specifications)*
3	Nuts, Zinc Plated Steel
4	Swivel Sleeve, Zinc Plated Steel
5	Rubber Profile

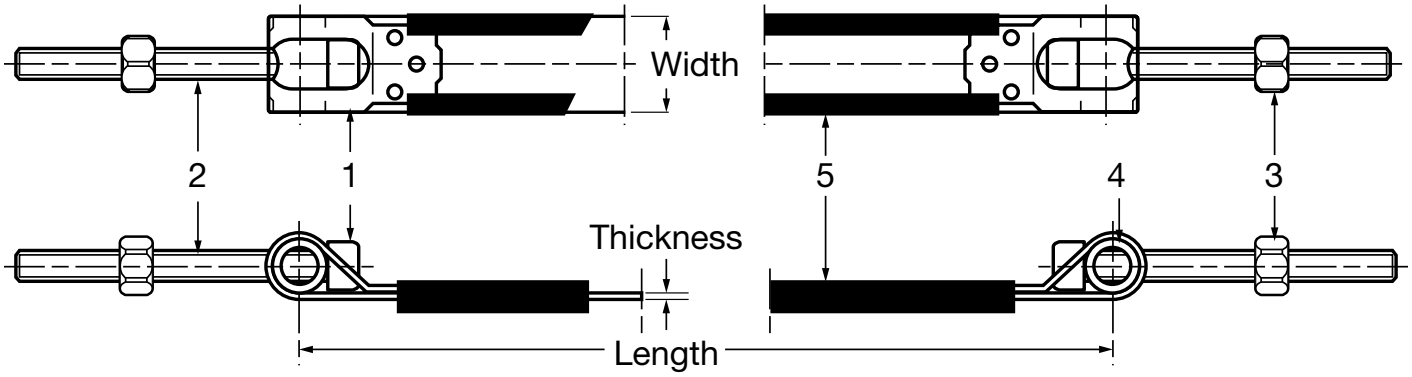

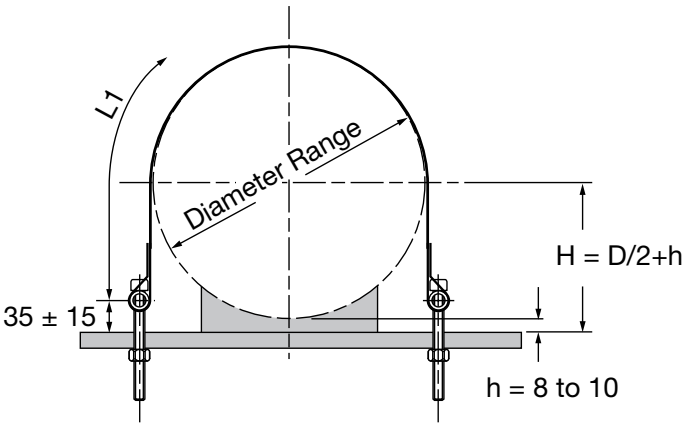

Dimensions

	Width x Thickness	Length Range (L1)
Light Range	25 x 1	187 - 921 mm
Heavy Range	30 X 1	232 - 1511 mm
Heavy II Range	30 X 1.5	232 - 1511 mm

Ordering

Band Straps are a custom product which must be quoted on an individual project basis. Band Straps are available with various lengths, widths, connecting hardware, and with or without rubber profiles. Contact **HYDAC** at **1-877-GO HYDAC** *(1.877.464.9322)* with your specifications to request a quotation.

Head Bolt Arrangements

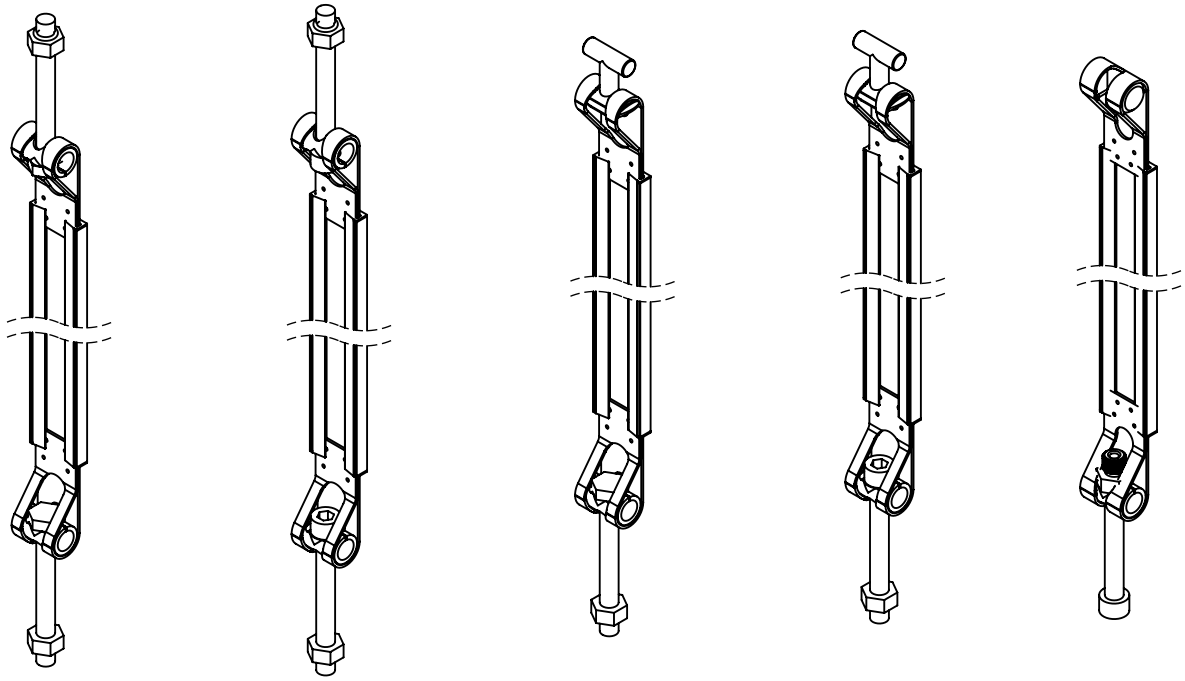

A1 B1 A1HB B1HB S1

Parts Legend

1 Hex Head Bolt
2 Socket Head Bolt
3 Steel Band
4 Band Profile
5 Swivel Sleeve
6 Hex Head Nut
7 H-Bolt
8 Locking Sleeve

Model Code

HRSGBLPU 30 A1 373 ST

Series
HRGBLPU = 25 x 1 / 30 x 1
HRSGBLPU = 30 x 1.5 / 40 x 1.5

Band Width *(mm)*
25, 30, 40

Hardware

A1	=	Metric Hex Head Bolts
B1	=	Metric Socket Head Bolts
A1HB	=	Metric Hex Head Bolt w/ H-Bolt
B1HB	=	Metric Socket Head Bolt w/ H-Bolt
S1	=	360° Clamp Arrangement, Metric Socket Head Bolt

Type
(Refer to table on next page)

Material of Metal Components

ST	=	Carbon Steel
A2	=	304 Stainless Steel

Material of Profile

(omit)	=	EPDM
NBR	=	Nitrile (Buna)

Dimensions A1 and B1 - Band width 1” (25mm)

Type	L1	Diameter Range
64	7.4 (187)	3 - 3.3 (77 - 83)
70	8.1 (206)	3.3 - 3.5 (84 - 90)
76	8.8 (224)	3.6 - 3.9 (91-98)
82	9.5 (242)	3.9-4.2 (98 -106)
88	10.2 (260	4.1 - 4.6 (105 - 118)
94	11 (279)	4.4 - 4.9 (112 - 125)
100	11.7 (297)	4.7 - 5.4 (119 - 136)
106	12.4 (316)	5 - 5.7 (127 - 145)
115	13.5 (343)	5.4 - 6.1 (137 - 156)
120	14.1 (358)	5.6 - 6.3 (143 - 161)
124	14.6 (371)	5.8 - 6.5 (148 - 166)
133	15.7 (399)	6.3 - 7 (159 - 177)
142	16.8 (427)	6.7 - 7.4 (170 - 188)
151	17.9 (455)	7.1 - 7.8 (181 - 199)
160	19 (483)	7.6 - 8.3 (192 - 210)
169	20.1 (511)	8 - 8.7 (203 - 221)
178	21.2 (539)	8.4 - 9.1 (214 - 232)
187	22.3 (567)	8.9 - 9.6 (225 - 243)
196	23.3 (591)	9.3 - 10 (236 - 254)
205	24.5 (623)	9.7 - 10.4 (247 - 265)
214	25.6 (651)	10.2 - 10.9 (258 - 276)
223	26.7 (679)	10.6 - 11.3 (269 - 287)
231	27.7 (704)	10.9 - 11.7 (278 - 296)
234	28.1 (713)	11.1 - 11.8 (281 - 299)
241	28.9 (735)	11.4 - 12.1 (290 - 308)
250	30.1 (764)	11.9 - 12.6 (301 - 319)
259	31.2 (792)	12.3 - 13 (312 - 330)
268	32.3 (820)	12.7 - 13.4 (323 - 341)
277	33.4 (849)	13.1 - 13.9 (334 - 352)
286	34.5 (877)	13.6 - 14.3 (345 - 363)
295	35.6 (905)	14 - 14.7 (356 - 374)
300	36.3 (921)	14.3 - 15 (363 - 382)

Dimensions A1 and B1 - Band width 1.2” (30mm) / 1.6” (40 mm)

Type	L1	Diameter Range
80	9.1 (232)	3.8 - 4.2 (96 - 106)
89	10.2 (260)	4.2 - 4.6 (107 - 116)
98	11.3 (287)	4.6 - 5 (117 - 127)
107	12.4 (315)	5 - 5.4 (128 - 138)
116	13.5 (342)	5.5 - 5.9 (139 - 150)
125	14.6 (370)	5.9 - 6.6 (150 - 168)
134	15.7 (398)	6.3 - 7.2 (161 - 183)
143	16.8 (426)	6.8 - 7.6 (172 - 194)
152	17.9 (454)	7.2 - 8.1 (183 - 205)
165	19.4 (494)	7.8 - 8.7 (198 - 221)
178	21 (534)	8.4 - 9.3 (213 - 236)
191	22.6 (575)	9 - 9.9 (229 - 252)
204	24.2 (615)	9.6 - 10.6 (245 - 268)
217	25.8 (656)	10.3 - 11.2 (261 - 284)
230	27.4 (696)	10.9 - 11.8 (276 - 299)
243	29 (737)	11.5 - 12.4 (292 - 315)
256	30.6 (777)	12.1 - 13 (308 - 331)
269	32.2 (818)	12.8 - 13.7 (324 - 347)
282	33.8 (859)	13.3 - 14.3 (339 - 362)
295	35.4 (900)	14 - 14.9 (355 - 378)
300	36.1 (916)	14.3 - 15.2 (363 - 386)
308	37 (941)	14.6 - 15.5 (371 - 394)
321	38.6 (981)	15.2 - 16.1 (387 - 410)
334	40.2 (1022)	15.9 - 16.8 (403 - 426)
347	41.9 (1063)	16.5 - 17.4 (419 - 442)
360	43.4 (1103)	17.1 - 18 (434 - 457)
373	45 (1144)	17.7 - 18.6 (450 - 473)
386	46.7 (1185)	18.3 - 19.3 (466 - 489)
399	48.2 (1225)	19 - 19.9 (482 - 505)
412	49.8 (1266)	19.5 - 20.5 (496 - 521)
425	51.5 (1307)	20.2 - 21.1 (513 - 537)
438	53.1 (1348)	20.8 - 21.8 (529 - 553)
451	54.6 (1388)	21.5 - 22.4 (545 - 568)
464	56.3 (1429)	22.1 - 23 (561 - 584)
477	57.9 (1470)	22.7 - 23.6 (577 - 600)
490	59.5 (1511)	23.3 - 24.3 (593- 616)

Dimensions
S1 -
Band width 1” (25mm)

Type	L1	Diameter Range
62	7.1 (181)	2.1 - 2.3 (54 - 59)
64	7.4 (187)	2.2 - 2.4 (56 - 61)
70	8.1 (206)	2.4 - 2.6 (62 - 67)
76	8.8 (224)	2.7 - 2.9 (68 - 73)
82	9.5 (242)	2.9 - 3.1 (74 - 79)
88	10.2 (260)	3.1 - 3.3 (80 - 85)
94	11 (279)	3.4 - 3.6 (86 - 91)
100	11.7 (297)	3.6 - 3.8 (92 - 97)
106	12.4 (316)	3.9 - 4.2 (98 - 106)
115	13.5 (343)	4.2 - 4.5 (107 - 115)
124	14.6 (371)	4.6 - 4.9 (116 - 124)
133	15.7 (399)	4.9 - 5.2 (125 - 133)
142	16.8 (427)	5.3 - 5.6 (134 - 142)
151	17.9 (455)	5.6 - 5.9 (143 - 151)
160	19 (483)	6 - 6.3 (152 - 160)
169	20.1 (511)	6.3 - 6.7 (161 - 169)
178	21.2 (539)	6.7 - 7 (170 - 178)
187	22.3 (567)	7 - 7.4 (179 - 187)
196	23.4 (595)	7.4 - 7.7 (188 - 196)
205	24.5 (623)	7.8 - 8.1 (197 - 205)
214	25.6 (651)	8.1 - 8.4 (206 - 214)
223	26.7 (679)	8.5 - 8.8 (215 - 223)
231	27.7 (704)	8.8 - 9.1 (224 - 232)
241	28.9 (735)	9.2 - 9.5 (233 - 241)
250	30.1 (764)	9.5 - 9.8 (242 - 250)
259	31.2 (792)	9.9 - 10.2 (251 - 259)
268	32.3 (820)	10.2 - 10.6 (260 -268)
277	33.4 (849)	10.6 - 10.9 (269 - 277)
286	34.5 (877)	10.9 - 11.3 (278 - 286)
295	35.6 (905)	11.3 - 11.6 (287 - 295)

Dimensions
S1 -
Band width 1.2” (30mm) / 1.6” (40 mm)

Type	L1	Diameter Range
80	9.1 (232)	2.8 - 3 (71 - 76)
89	10.2 (260)	3.1 - 3.3 (80 - 85)
98	11.3 (287)	3.5 - 3.7 (89 - 94)
107	12.4 (315)	3.9 - 4.1 (98 - 103)
116	13.5 (342)	4.2 - 4.5 (107 - 115)
125	14.6 (370)	4.6 - 4.9 (116 - 124)
134	15.7 (398)	4.9 - 5.2 (125 -133)
143	16.8 (426)	5.3 - 5.6 (134 - 142)
152	17.9 (454)	5.6 - 5.9 (143 - 151)
165	19.4 (494)	6.1 - 6.5 (156 - 164)
178	21 (534)	6.7 - 7 (169 - 177)
191	22.6 (575)	7.2 - 7.5 (182 - 190)
204	24.2 (615)	7.7 - 8 (195 - 203)
217	25.8 (656)	8.2 - 8.5 (208 - 216)
230	27.4 (696)	8.7 - 9 (221 - 229)
243	29 (737)	9.2 - 9.6 (234 - 245)
256	30.6 (777)	9.7 - 10.2 (247 - 258)
269	32.2 (818)	10.2 - 10.7 (260 - 271)
282	33.8 (859)	10.7 - 11.2 (273 - 284)
295	35.4 (900)	11.3 - 11.7 (286 - 297)
300	36.1 (916)	11.5 - 11.9 (291 - 302)
308	37 (941)	11.8 - 12.2 (299 - 310)
321	38.6 (981)	12.3 - 12.7 (312 - 323)
334	40.2 (1022)	12.8 - 13.2 (325 - 336)
347	41.9 (1063)	13.3 - 13.7 (338 - 349)
360	43.4 (1103)	13.8 - 14.3 (351 - 362)
373	45 (1144)	14.3 - 14.8 (364 - 375)
386	46.7 (1185)	14.8 - 15.3 (377 - 388)
399	48.2 (1225)	15.4 - 15.8 (390 - 401)
412	49.8 (1266)	15.9 - 16.3 (403 - 414)
425	51.5 (1307)	16.4 - 16.8 (416 - 427)
438	53.1 (1348)	16.9 - 17.3 (429 - 440)
451	54.6 (1388)	17.4 - 17.8 (442 - 453)
464	56.3 (1429)	17.9 - 18.3 (455 - 466)
477	57.9 (1470)	18.4 - 18.9 (468 - 479)
490	59.5 (1511)	18.9 - 19.4 (481 - 492)
503	61.1 (1552)	19.4 - 19.9 (494 - 505)

Notes

C

Reservoir Accessories

The reservoir of a hydraulic system can be a significant source of contamination. At the same time, the reservoir is an ideal location for correcting adverse fluid conditions. The application of proper HYDAC reservoir accessories will allow for the monitoring and control of oil cleanliness, temperature, and level.

Overview of Reservoir Accessories

The reservoir of a hydraulic system can be a significant source of contamination. At the same time, the reservoir is an ideal location for correcting adverse fluid conditions. The application of proper HYDAC reservoir accessories will allow for the monitoring and control of oil cleanliness, temperature, and level.

Breathers are commonly overlooked, or regarded as a commodity, and selected based solely upon price. This mistake can cause system inefficiency and component failure, resulting in lost production and costly repairs, especially when harsh environmental conditions exist. Using high quality HYDAC breathers and filler breathers will effectively combat the ingression of airborne contamination and moisture, therefore increasing the efficiency and reliability of the system.

The addition of new oil to a reservoir is yet another opportunity for contaminant to enter the system. Sometimes large contaminant, which will undoubtedly cause catastrophic damage to the pump. HYDAC filler breathers will ensure that large contaminant do not enter the tank during filling, and suction strainers will keep any large contaminant that do exist in the reservoir from entering the supply line. New oil also contains more fine particle contaminant than recommended for most systems. That's right... most new oil is "dirty." Removal of these fine particles is easily accomplished by using HYDAC portable filter carts, or hand held filtration units.

Fluid level must also be monitored to avoid starving the pump. HYDAC offers fluid level indicators (sometimes called sight gauges) which allow for the oil level to be viewed outside of the tank. These indicators are also available with electric switches which can be used to trigger alarms. Thermometers and thermal probes are additional options in HYDAC's line of fluid level indicators.

The reservoir provides an excellent opportunity to remove solid contamination as well as water through the use of offline filtration loops. HYDAC manufactures offline filtration units for both types of contamination. The application of such units will increase system reliability, and increase the service life of the system's other filter elements by capturing a large percentage of total system contamination. These units provide the added benefit of being serviceable during system operation.

If excessive heat becomes a problem, HYDAC manufactures a wide range of coolers (both air-cooled and water-cooled) to remove this heat. Cooling packages are also available complete with filters, providing a compact solution to remove both heat and contamination.

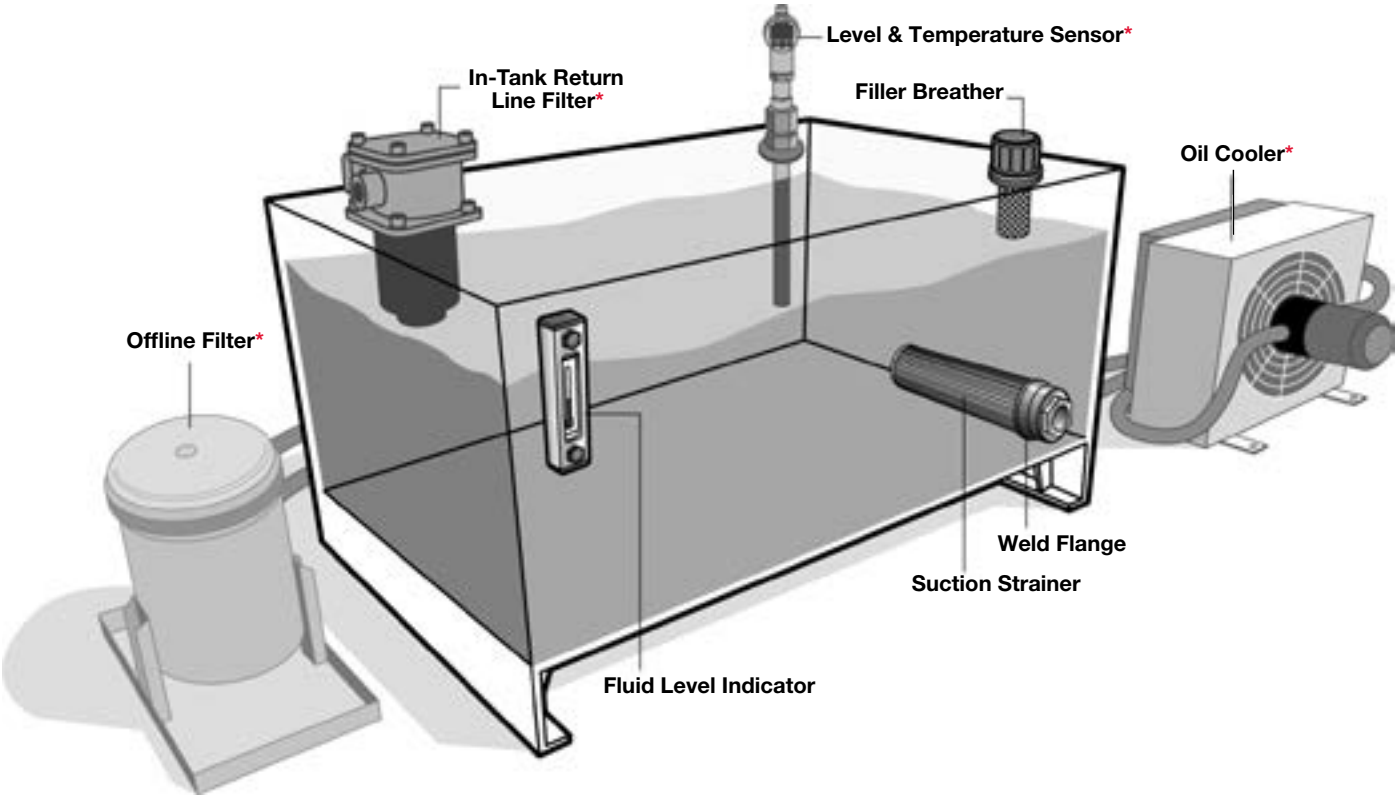

*Products not included in this catalog

For additional information on these products please refer to:

Filters Hydraulic & Lube Oil

- In-Tank
- Inside Tank
- Inline
- Duplex
- Return Line

Cooling Systems

- Air Cooled Oil Coolers
- Water Cooled Oil Coolers
- Mobile Coolers
- Industrial Coolers

Filter Systems

- Portable Filters
- Offline Filtration
- Contamination Monitors & Diagnostics
- Water Content Control
- Fluid Analysis

Electronics

- Pressure & Temperature Transducers & Switches
- Flow Rate Meters
- Digital Displays
- Portable Data Recorders

Breathers & Filler Breathers

BF, BL & BLT, BDE, BDZ, & ELF Series

Air Flow Rates from 80 to 1600 gpm
Various connection types
Pressurized or free flowing

Suction Strainers

SFE, HTMS Series

In-tank models (SFE) mount to an internal fitting on reservoir. Tank Mount models (HTMS) mount through the tank wall and act as the external fitting for connecting supply line hoses.

- Flow rates from 3 to 100 gpm
- NPT and SAE connections
- Models available with bypass

Fluid Level Indicators

FSK & FSA Series

3” to 15” sight tubes
Electric level switches available
Pressurized or free flowing thermometers and temperature probes available

Gauge Isolators

MA, MSL & MS Series

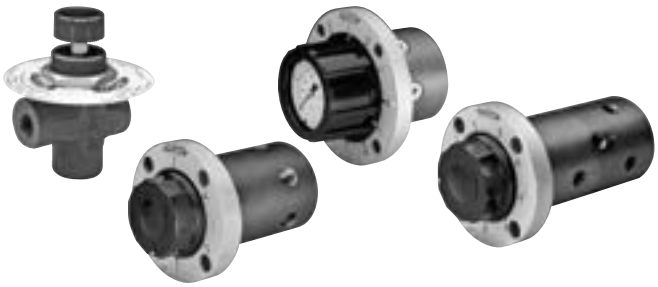

Gauges

HPG Series

Test Points

1620 & 1215 Series

Install these for measuring pressure, or fluid sampling while system is in operation, without fluid loss.

Split Flanges

SAE Code 61 & 62

Notes

C1

Breathers Overview

Breathers are a integral component in any hydraulic system. Breathers provide protection from contamination found in harsh industrial environments. It is well advised to address both contaminant exclusion and removal. An old rule of thumb states that it cost 10 times as much to **remove** a particle from your system as it does to **exclude** it. Since this is true, it is easy to see that the benefits of using a high quality breather greatly out-weigh the costs. Whether removing particulate, preventing moisture from getting into your reservoir or both, HYDAC has a solution, the know-how, and a product for you.

Overview

Breather & Filler Breather Product Range

Model

Technical Details	BF10	ELF10	BF4	ELF4	BF30	ELF30	BF3	ELF3	BF7
GPM (cfm) (at Δp = 0.01 bar)	53 (7)	53 (7)	33 (4.4)	33 (4.4)	105 (14)	105 (14)	105 (14)	105 (14)	260 (35)
GPM (cfm) (at Δp = 0.04 bar)	100 (13)	100 (13)	90 (12)	90 (12)	230 (31)	230 (31)	230 (31)	230 (31)	475 (63)
Cap Material	Polyamide	Polyamide	Steel	Steel	Polyamide	Polyamide	Steel	Steel	Polyamide
Strainer Material	N/A	Polyamide	N/A	Polyamide	N/A	Polyamide	N/A	Polyamide	N/A
Replaceable Element	No	No	No	No	No	No	No	No	Yes
Connection Type	Threaded	Flanged	Threaded	Flanged	Threaded	Flanged	Threaded	Flanged	Threaded
Connection Size(s)	G 1/4, 1/2 NPT, M22, M18, SAE-12, 3/8 NPT	3 hole flange	G1/4	3 hole flange	G 3/4, 3/4 NPT, 1 NPT, M42, SAE-12	6 hole flange	G 3/8, G 1/2, G 3/4, 3/4 NPT	6 hole flange	G 1, 3/4 NPT, SAE-16
Element Media	3 µm paper	3 µm paper	3 or 10 µm paper	3 or 10 µm paper	3 or 10 µm paper	3 or 10 µm paper	3 or 10 µm paper	3 or 10 µm paper	3 or 10 µm paper

Options

Clogging Indicator	N/A	N/A	N/A	N/A	N/A	N/A	N/A	N/A	Optional
Relief Valve	Optional	Optional	N/A	N/A	Optional	Optional	Optional	Optional	N/A
Antisplash	Optional	Optional	N/A	N/A	Optional	Optional	N/A	N/A	Optional
Dipstick	Optional	Optional	N/A	N/A	Optional	Optional	Optional	Optional	N/A

For sizes BF/ELF 10 thru BF/ELF 72 we recommend you size the breathers at Δp = 0.01 bar but in optimal conditions you may size the breathers at up to Δp = 0.04 bar (Call HYDAC Accessories Division if you have any questions).

Model

ELF7	BF72	ELF72
260 (35)	315 (42)	315 (42)
475 (63)	555 (74)	555 (74)
Polyamide	Polyamide	Polyamide
Polyamide	N/A	Polyamide
Yes	Yes	Yes
Flanged	Threaded	Flanged
6 hole flange	G1	6 hole flange
3 or 10 µm paper	3 or 10 µm paper	3 or 10 µm paper

Technical Details	BF5	ELF5	BF52	ELF52	BF8	BF9
GPM (cfm) (at v = 20 m/s)	690 (92)	690 (92)	950 (127)	950 (127)	1450 (193)	2550 (340)
GPM (cfm) (at Δp = 0.01 bar)	790 (105)	790 (105)	1320 (176)	1320 (176)	2640 (352)	3960 (528)
Cap Material	Steel	Steel	Steel	Steel	Steel	Steel
Strainer Material	N/A	Steel	N/A	Steel	N/A	N/A
Replaceable Element	Yes	Yes	Yes	Yes	Yes	Yes
Connection Type	Threaded	Flanged	Threaded	Flanged	Flanged	Flanged
Connection Size(s)	G 2-1/2 female	G 2-1/2, G 3 male	G 2-1/2 female	G 2-1/2, G3 male	DN93 4 hole flange	DN125 8 hole flange
Element Media	3 or 10 µm paper	3 or 10 µm paper	3 or 10 µm paper	3 or 10 µm paper	1 or 2 µm betamicron	2 µm betamicron

Options

Optional	Optional	Optional
N/A	N/A	N/A
Optional	N/A	N/A
N/A	N/A	N/A

Clogging Indicator	N/A	N/A	N/A	N/A	Optional	Optional
Relief Valve	Optional	N/A	N/A	N/A	N/A	N/A
Antisplash	N/A	N/A	N/A	N/A	N/A	N/A
Dipstick	N/A	N/A	N/A	N/A	N/A	N/A

For sizes BF/ELF 5 thru BF 9 we recommend you size the breathers at v = 20 m/s but in optimal conditions you may size the breathers at up to Δp = 0.01 bar. (Call HYDAC Accessories Division if you have any questions).

BL Series *(C1-17 – C1-18)*

Specifications:

- Maximum flow rate: 110 SCFM/850 GPM
- 3 or 10 micron
- Steel Canister
- 10 micron Betamicron®
- Replaceable element

BDE Series *(C1-19 – C1-20)*

Specifications

- Durable ABS plastic and impact-modified Plexiglas
- 2 micron, 100% efficiency
- Airflow up to 100 scfm (750 gpm)

Breathers & Filler Breather Technical Overview

Importance of Breathers

Breathers are an integral component in any Hydraulic system. Breathers provide protection from contamination found in harsh industrial environments. It is well advised to address both contaminant exclusion and removal. An old rule of thumb states that it **cost 10 times as much to REMOVE a particle from your system as it does to EXCLUDE it**. Since this is true, it is easy to see that the benefits of using a high quality breather greatly out weigh the costs.

Recommendations

1) HYDAC recommends selecting a breather with a filtration rating *(micron rating)* that is equivalent to or finer than your finest system filter.

2) Breathers do get clogged over time. HYDAC recommends the following change-out schedules:

For breathers without pressure gauges
- Change your breather annually or with every service interval

For breathers with pressure gauges
- Change your breathers at a 3 psi pressure drop, at 7 psi pressure drop the pump can cavitate

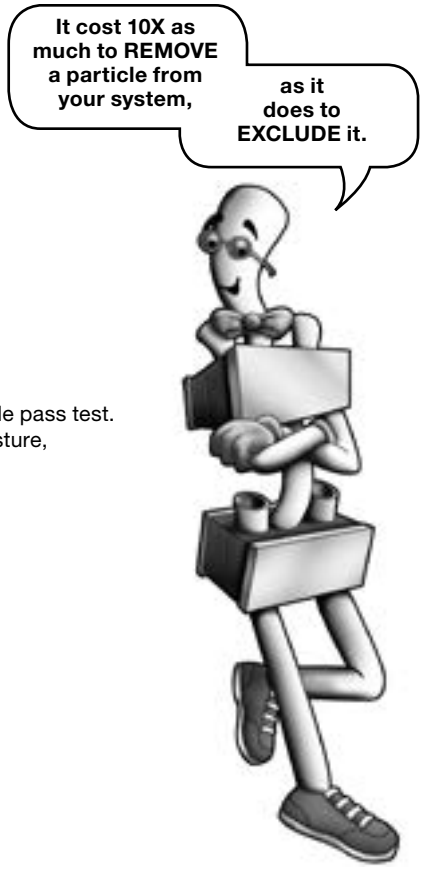

HYDAC High Quality Breathers

HYDAC Breathers use HIGH quality filtration.

- For 3µm breathers: d99.85 = 3 µm
- For 10µm breathers: d100 = 10 µm

The d100 rating means that 100% of 10 µm particles are captured by the breather during a standard ISO single pass test.

Standard elements are made of phenolic resin impregnated paper, which provides resistance to moisture, ensuring proper filtration over the operational service life of your breather.

Pressurized Breathers

The use of pressurized breathers adds certain benefits:

- Provides additional protection from moisture which can condense in your tank, causing oil degradation and tank erosion
- Provides positive pressure to pump suction line
- Increased breather service life due to less breathing
- Performs anti-splash function

Tank Pressure Using a Standard Breather

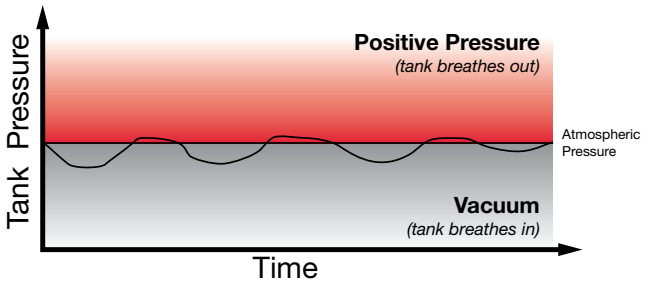

When fluid level rises, the tank pressure rises and air is immediately expelled through the breather whenever positive pressure exists.

When fluid level lowers, the tank pressure drops and air is immediately drawn in through the breather whenever a vacuum exists.

Air is constantly moving through the breather in order to maintain atmospheric pressure.

Tank Pressure Using a Pressurized Breather

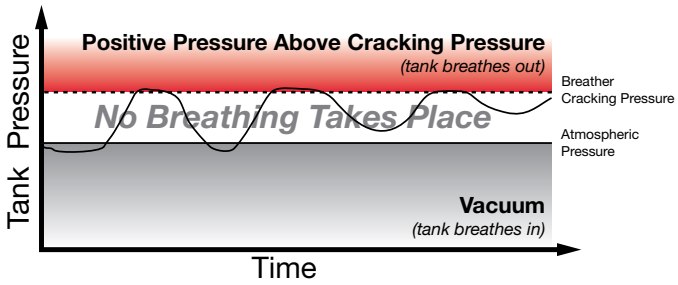

When fluid level rises, the existing air volume is compressed, and no air is expelled until the cracking pressure is surpassed.

When fluid level lowers, the tank pressure drops until a vacuum is created at which point, air will be drawn in through the breather.

Air is only expelled when the tank pressure is *above the cracking pressure, and air is only drawn in below atmospheric pressure*. The majority of the operational cycle will take place between these two conditions.

Note: Low temperature options available. All breathers are available with special options and materials. Please contact the factory.

BF 3 Series

Specifications

- Maximum flow rate - 31 scfm / 230 gpm at 0.04 bar
- Epoxy coated steel cap
- Zinc-plated internals
- 3 or 10 micron
- Threaded connection
- Pressurized breather with relief valve *(optional - BF3 only)*
- Phenolic resin impregnated filter element

Hydraulic Symbols

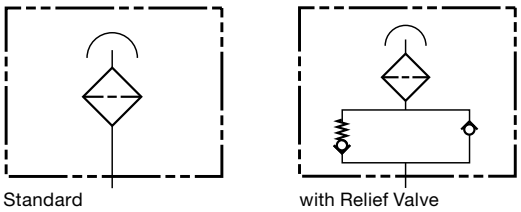

Model Code

BF P 3 G 3 W 1.0 /

Filter Type
BF = Breather

Filter Element Material
P = Phenolic Resin Impregnated Paper

Size
3 = 31 scfm (230 gpm) max.

Type of Connection
G = BSPP
N = NPT

Filtration Rating *(micron)*
3 = 3µm Air Filtration
10 = 10µm Air Filtration

Gauge Options
W = Without Indicator

Modification Number

		G(BSPP)	Relief Pressure	N (NPT)	Relief Pressure
1.0	=	G 3/4	-	3/4 NPT	-
2.0	=	G 3/8	-	-	-
3.0	=	G 1/2	-	-	-
4.0	=	G 3/4	0.4 bar	3/4 NPT	0.4 bar
5.0	=	G 3/4	0.7 bar	3/4 NPT	0.7 bar
6.0	=	G 3/4	0.2 bar	3/4 NPT	0.2 bar

Supplementary Details
(omit) = standard
RV = Relief Valve *(for use on pressurized tanks)*

Dimensions

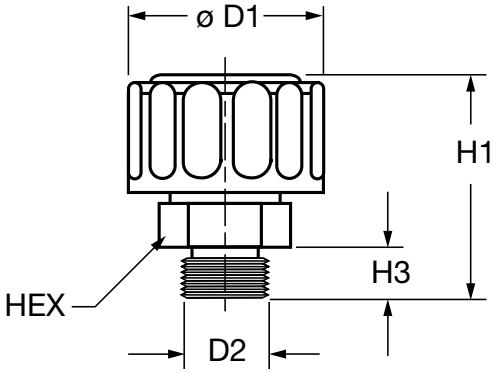

Size	ØD1	D2	H1	H3	HEX
BF 3..1.0	2.99”	G 3/4”	3.11”	0.63”	1-7/16”
BF 3..2.0	2.99”	G 3/8”	2.83”	0.47”	7/8”
BF 3..3.0	2.99”	G 1/2”	2.99”	0.55”	1-1/16”
BF 3..4.0	2.99” (76mm)	G 3/4”	3.11” (79mm)	0.63” (16mm)	1-7/16” (36mm)
BF 3..5.0		G 3/8”			
BF 3..6.0		G 1/2”			

Dimensions are for general information only, all critical dimensions should be verified by requesting a certified print.
Dimensions are in inches/(mm)

Note: Low temperature options available. All breathers are available with special options and materials. Please contact the factory.

BF 4 Series

Specifications

- Maximum flow rate - 12 scfm / 90 gpm at 0.04 bar
- Epoxy coated steel cap
- Zinc-plated internals
- 3 or 10 micron
- Threaded connection
- Phenolic resin impregnated filter element

Hydraulic Symbols

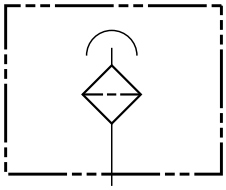

Standard

Model Code

BF P 4 G 3 W 1.0

Filter Type
BF = Breather

Filter Element Material
P = Phenolic Resin Impregnated Paper

Size
4 = 12 scfm (90 gpm) max.

Type of Connection
G = BSPP

Filtration Rating *(micron)*
3 = 3µm Air Filtration
10 = 10µm Air Filtration

Gauge Options
W = Without Indicator

Modification Number
1.0 = G 1/4 (BSPP)

Dimensions

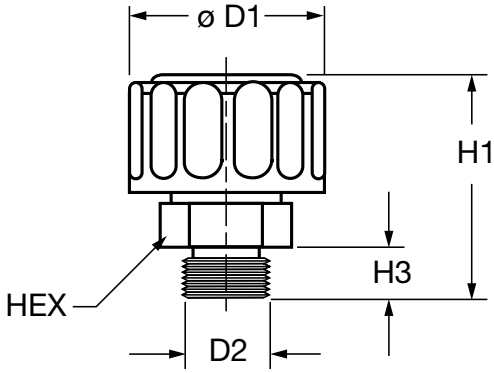

Size	ØD1	D2	H1	H3	HEX
BF 4..1.0	1.73" (44mm)	G 1/4" (ISO 228)	2.44" (62mm)	0.53" (13.5mm)	11/16" (17mm)

Dimensions are for general information only, all critical dimensions should be verified by requesting a certified print.
Dimensions are in inches/(mm)

Note: Low temperature options available. All breathers are available with special options and materials. Please contact the factory.

BF 10 Series

Specifications

- Maximum Flow Rate 13 scfm / 100 gpm at 0.04 bar
- Durable synthetic material (PA6)
- Filtration Rating 3 µm
- Buna N O-Ring
- Optional dipstick (contact factory)
- Optional customer logo (contact factory)
- Optional pressurized breather with relief valve
- Optional anti-splash device
- -22° to 212°F (-30° to 100°C)
- Phenolic resin impregnated filter element

Hydraulic Symbols

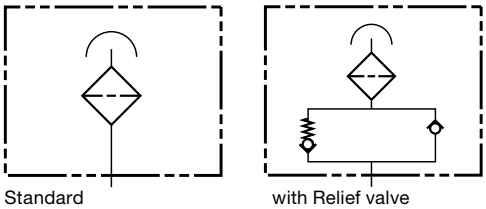

Standard with Relief valve

Model Code

BF P 10 G 3 W 1.0 / - RV0.4 - PS 74

Filter Type
BF = Breather

Filter Element Material
P = Phenolic Resin Impregnated Paper

Size
10

Type of Connection
G = BSPP
N = NPT
U = SAE
M = Metric threads

Filtration Rating *(micron)*
3 = 3µm Air Filtration

Gauge Option
W = Without Indicator

Modification Number
Connection Type

	G (BSPP)	N (NPT)	U (SAE)	M (Metric)
1.0 =	G 1/4	1/2 NPT	–	M22x1.5
2.0 =	G 3/8	3/8 NPT	–	M18x1.5
3.0 =	G 1/2	–	SAE-12	–

Options
(omit) = None
RV0.2 = Relief Pressure 3 psi (0.2 bar)
RV0.4 = Relief Pressure 6 psi (0.4 bar)
RV0.7 = Relief Pressure 10 psi (0.7 bar)
AS = Anti-splash protection *(only for version without RV)*

Dipstick
PS# = Dipstick *(Length follows PS in millimeters)*
minimum quantities apply

Dimensions

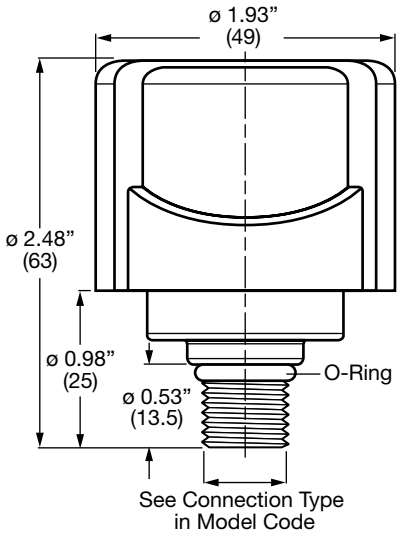

Dimensions are for general information only, all critical dimensions should be verified by requesting a certified print.
Dimensions are in inches/(mm)

Note: Low temperature options available. All breathers are available with special options and materials. Please contact the factory.

BF 30 Series

Specifications

- Maximum flow rate - 31 scfm / 230 gpm at 0.04 bar
- Durable synthetic material (PA6)
- 3 or 10 micron
- Buna N O-Ring
- Threaded breather connection
- Optional dipstick *(contact factory)*
- Optional customer logo *(contact factory)*
- Optional pressurized breather with relief valve
- Optional anti-splash device
- -22° to 212°F (-30° to 100°C)
- Phenolic resin impregnated filter element

Hydraulic Symbols

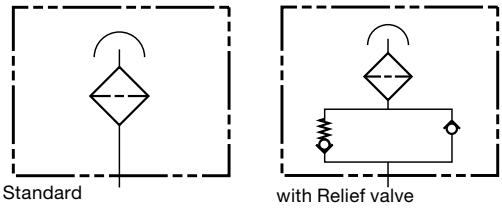

Model Code

BF P 30 G 3 W 1.0 / -RV0.4 - DS150

Filter Type
BF = Breather

Filter Element Mat.
P = Phenolic Resin Impregnated Paper

Size
30

Type of Connection
G = BSPP
N = NPT
U = SAE
M = Metric Threads

Filtration Rating *(micron)*
3 = 3µm Air Filtration
10 = 10µm Air Filtration

Gauge Options
W = Without Indicator

Modification Number

Connection Type

	G (BSPP)	N (NPT)	U (SAE)	M (Metric)
1.0 =	G 3/4	3/4 NPT	SAE-12	M42x2
2.0 =	–	1 NPT	–	M30x1.5

Options
(omit) = None
RV0.2 = Relief Pressure 3 psi (0.2 bar)
RV0.4 = Relief Pressure 6 psi (0.4 bar)
RV0.7 = Relief Pressure 10 psi (0.7 bar)
AS = Anti-Splash protection *(only for version without RV)*

Dipstick
DS# = Dipstick *(Length follows DS in millimeters)*
minimum quantities apply

Anti-Splash

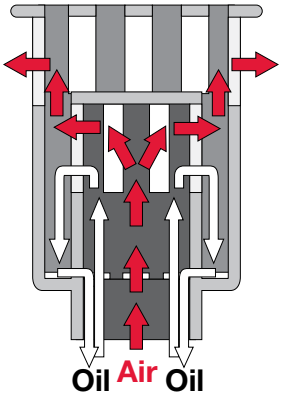

Dimensions

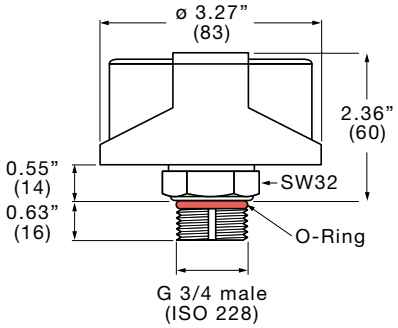

Dimensions are for general information only, all critical dimensions should be verified by requesting a certified print.
Dimensions are in inches/(mm)

Note: Low temperature options available. All breathers are available with special options and materials. Please contact the factory.

BF 7 Series

Specifications

- Maximum flow rate - 63 scfm / 475 gpm at 0.04 bar
- Durable synthetic material (PA6)
- 3 or 10 micron
- Replaceable element Phenolic resin impregnated paper
- Threaded breather cap connection
- Differential gauge *(optional)*
- -22° to 212°F (-30° to 100°C)

Hydraulic Symbols

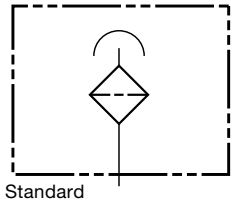

Standard

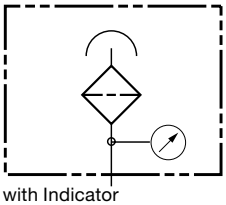

with Indicator

Model Code

BF P 7 G 3 K 1.0 / -AS

Filter Type
BF = Breather

Filter Element Material
P = Phenolic Resin Impregnated Paper

Size

Type of Connection
G = BSPP
N = NPT
U = SAE

Filtration Rating *(micron)*
3 = 3µm Air Filtration
10 = 10µm Air Filtration

Gauge Options
W = Without Indicator
K = With Indicator - Range: -14.5 to 9 psi (-1 to 0.6 bar)

Modification Number

	Connection Type		
	G (BSPP)	N (NPT)	U (SAE)
1.0 =	G 1	3/4 NPT	SAE-16

Options
(omit) = None
AS = Anti-Splash protection

Dimensions

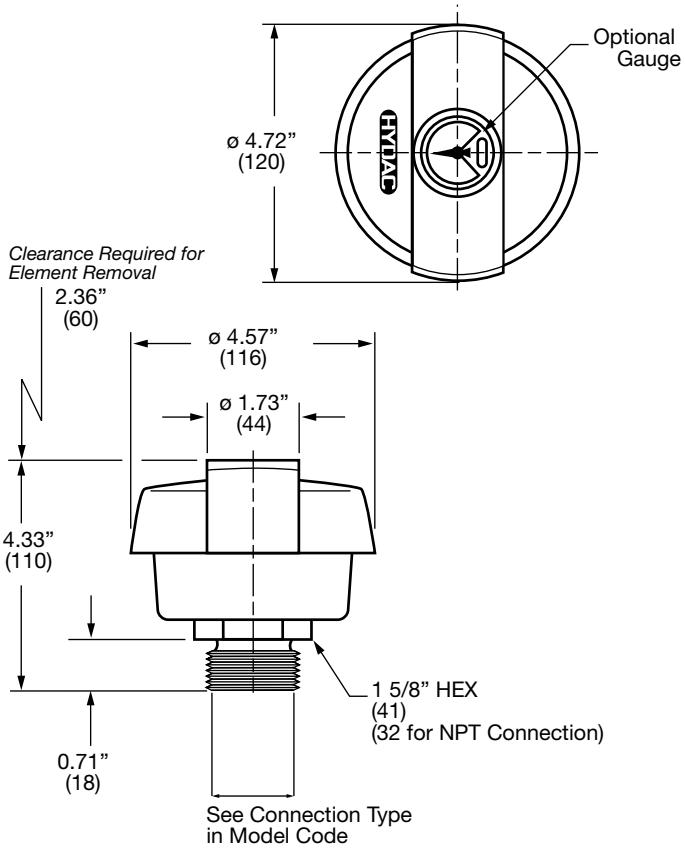

Dimensions are for general information only, all critical dimensions should be verified by requesting a certified print.
Dimensions are in inches/(mm)

Replacement Elements

Micron	Model Code	Part No.
3	0007L003P	00310948
10	0007L010P	00310485

Note: Low temperature options available. All breathers are available with special options and materials. Please contact the factory.

PN#02080105 / 01.17 / ACC1603-1753

BF 7 Series

Breathers with Visual Indicator

Specifications

- Maximum flow rate - up to 74 scfm / 555 gpm at 0.04 bar
- Durable synthetic material (PA6)
- 3 or 10 micron
- Replaceable element
- Phenolic resin impregnated paper
- Threaded or flanged breather connection
- Visual indicator *(see below)*
- -22° to 212°F (-30° to 100°C)

Hydraulic Symbols

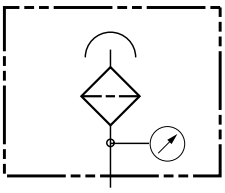

with Indicator

Model Code

BF P 7 F 3 UBM 0.0 /- AS

Filter Type
BF = Breather

Filter Element Material
P = Phenolic Resin Impregnated Paper

Size
7 (63 scfm / 475 gpm)

Type of Connection
F = Flanged
G = Threaded
N = NPT

Filtration Rating *(micron)*
3 = 3µm Air Filtration
10 = 10µm Air Filtration

Gauge Options
UBM = Visual Indicator of Vacuum Pressure with Manual Reset - Range to 0.5 psi (0.035 bar)

Tank Connection

		G(BSPP)	F(Flanged)	N(NPT)
0.0	=	-	DIN 24557/2 6 Hole Flange	-
1.0	=	1" BSPP	-	3/4"
2.0	=	3/4" BSPP	-	-
3.0	=	1 1/2-16 UN-2B *(female)*	-	-

Options
(omit) = None
AS = Anti-Splash protection

Visual Indicator

The visual indicator shows by percentage the increase in vacuum pressure drop across the element. The percentage remains visible even when the system is turned off. When the element is changed a manual reset button must be pressed.

Model Code

VMF 0.035 UBM.X

Part Number

01279244

Dimensions

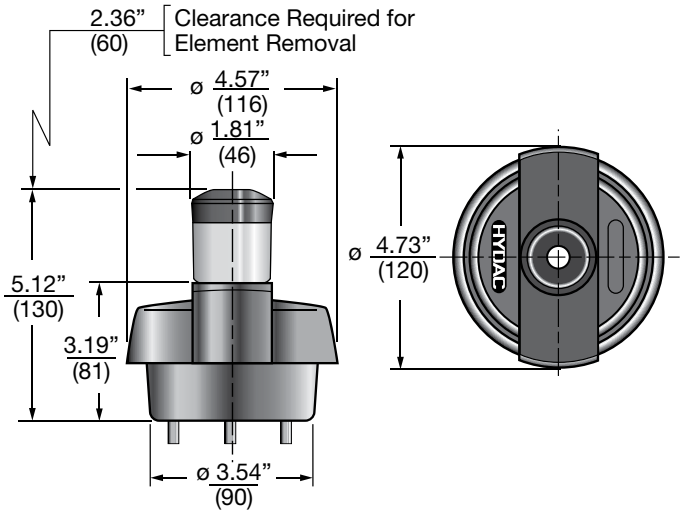

Dimensions are for general information only, all critical dimensions should be verified by requesting a certified print.
Dimensions are in inches/(mm)

Replacement Elements

Micron	Model Code	Part No.
3	0007L003P	00310948
10	0007L010P	00310485

Note: Low temperature options available. All breathers are available with special options and materials. Please contact the factory.

BF 72 Series

Specifications

- Maximum flow rate - 74 scfm / 555 gpm at 0.04 bar
- Durable synthetic material (PA6)
- 3 or 10 micron
- Replaceable element
- Phenolic resin impregnated paper
- Removable lid to access fill port
- Threaded breather cap connection
- Differential gauge *(optional)*
- -22° to 212°F (-30° to 100°C)

Hydraulic Symbols

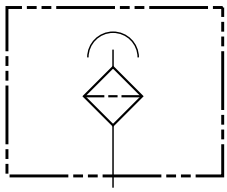

Standard

Model Code

BF P 72 G 3 W 1 . 0 / -AS

Filter Type
BF = Breather

Filter Element Material
P = Phenolic Resin Impregnated Paper

Size
72

Type of Connection
G = Threaded BSPP
N = Threaded NPT *(consult factory)*

Filtration Rating *(micron)*
3 = 3µm Air Filtration
10 = 10µm Air Filtration

Gauge Options
W = Without Indicator

Tank Thread Connection

	G (BSPP)	N (NPT)
1.0 =	G1	3/4 NPT

Modification Number
0 = Standard

Options
(omit) = None
AS = Anti-splash protection

Dimensions

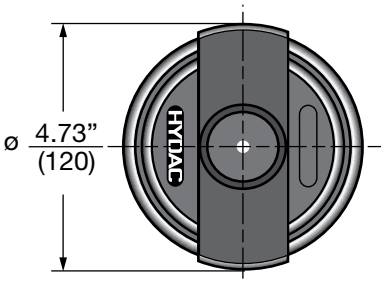

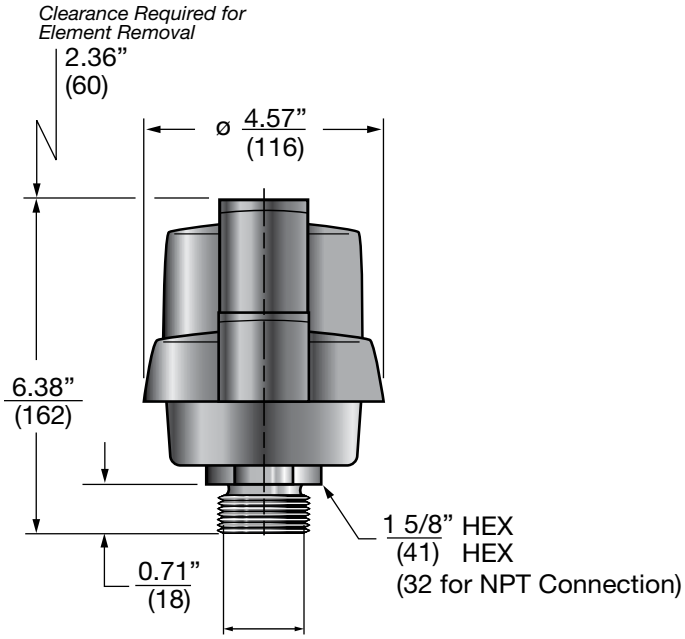

See Connection Type in Model Code

Dimensions are for general information only, all critical dimensions should be verified by requesting a certified print.
Dimensions are in inches/(mm)

Replacement Elements

Micron	Model Code	Part No.
3	0072L003P	1293285

Note: Low temperature options available. All breathers are available with special options and materials. Please contact the factory.

BF 5 Series

Specifications

- Maximum flow rate - 105 scfm / 790 gpm at 0.01 bar
- Steel housing
- 3 or 10 micron
- Replaceable element
- Phenolic resin impregnated filter element

Hydraulic Symbols

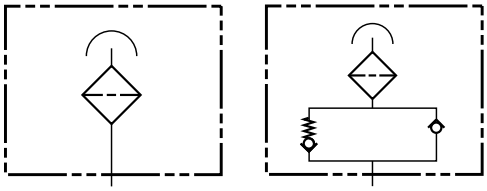

Model Code

BF P 5 G 3 W 1 . 0 / -RV0.4

Filter Type
BF = Breather

Filter Element Material
P = Phenolic Resin Impregnated Paper

Size
5

Type of Connection
G = BSPP
N = NPT

Filtration Rating *(micron)*
3 = 3µm Air Filtration
10 = 10µm Air Filtration

Gauge Options
W = Without Indicator

Tank Thread Connection *(ISO 228)*
G(BSPP)
1 = 2 1/2" BSPP (ISO 228, female)
N(NPT)
2 1/2" NPT, (female)

Modification Number
0 = Standard

Options
(omit) = None
RV0.4= Relief Pressure 6 psi (0.4 bar)

Dimensions

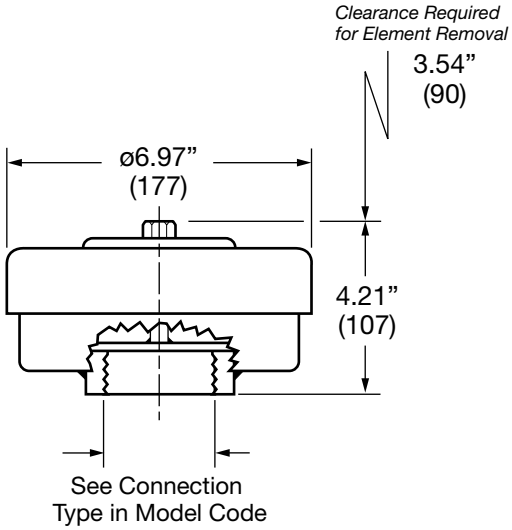

Dimensions are for general information only, all critical dimensions should be verified by requesting a certified print.
Dimensions are in inches/(mm)

Replacement Elements

Micron	Model Code	Part No.
3	0005L003P	00309450
10	0005L010P	00306097

Note: Low temperature options available. All breathers are available with special options and materials. Please contact the factory.

BF 52 Series

Specifications

- Maximum flow rate - 176 scfm / 1320 gpm at 0.01 bar
- Steel housing
- 3 or 10 micron
- Replaceable element *(uses 2 of the standard size 5 elements)*
- Phenolic resin impregnated paper
- G 2 1/2” female threaded connection

Hydraulic Symbols

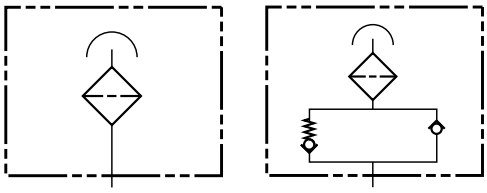

Standard with Relief Valve

Model Code

BF P 52 G 3 W 1 . 0 / -RV0.4

Filter Type
BF = Breather

Filter Element Material
P = Phenolic Resin Impregnated Paper

Size

Type of Connection
G = Threaded

Filtration Rating *(micron)*
3 = 3µm Air Filtration
10 = 10µm Air Filtration

Gauge Options
W = Without Indicator

Tank Connection
G(BSPP)
1 = 2 1/2” BSPP (ISO 228, female)

Modification Number
0 = Standard

Options
(omit) = None
RV0.4 = Relief Pressure 6 psi (0.4 bar)

Dimensions

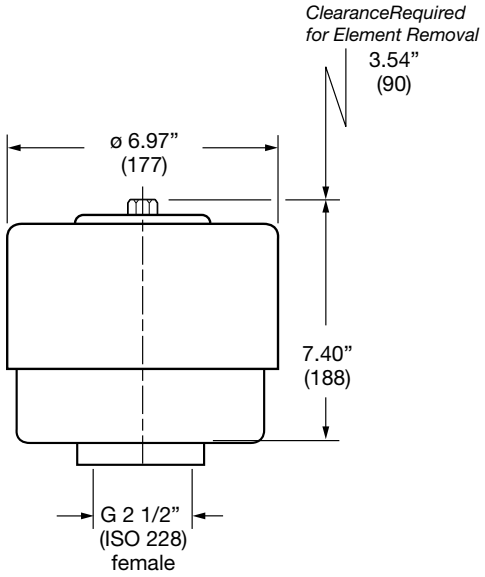

Dimensions are for general information only, all critical dimensions should be verified by requesting a certified print.
Dimensions are in inches/(mm)

Replacement Elements

Micron	Model Code	Part No.	Qty Req.
3	0005L003P	00309450	2
10	0005L010P	00306097	2

Note: Low temperature options available. All breathers are available with special options and materials. Please contact the factory.

BF 8 Series

Specifications

- Maximum flow rate - 352 scfm / 2640 gpm at 0.01 bar
- Steel housing
- 1 micron Air FIlter
- Replaceable element
- 4 bolt DN 93 flange

Hydraulic Symbols

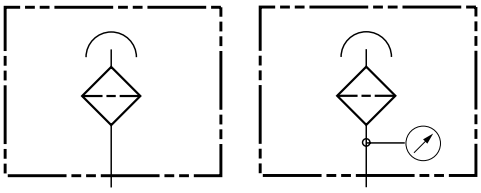

Model Code

BF BN 8 F 1 A 1.0

Filter Type
BF = Breather

Filter Element Material
BN = Betamicron®

Size
8

Type of Connection
F = Flanged (DN 93, 4 bolt)

Filtration Rating *(micron)*
1 = 1µm Air Filtration
2 = 2µm Air Filtration

Gauge Options
A = Without Indicator
K = With Indicator Gauge
Range: -14.5 to 9 psi (-1 bar to 0.6 bar)

Modification Number
1.0 = Standard

Dimensions

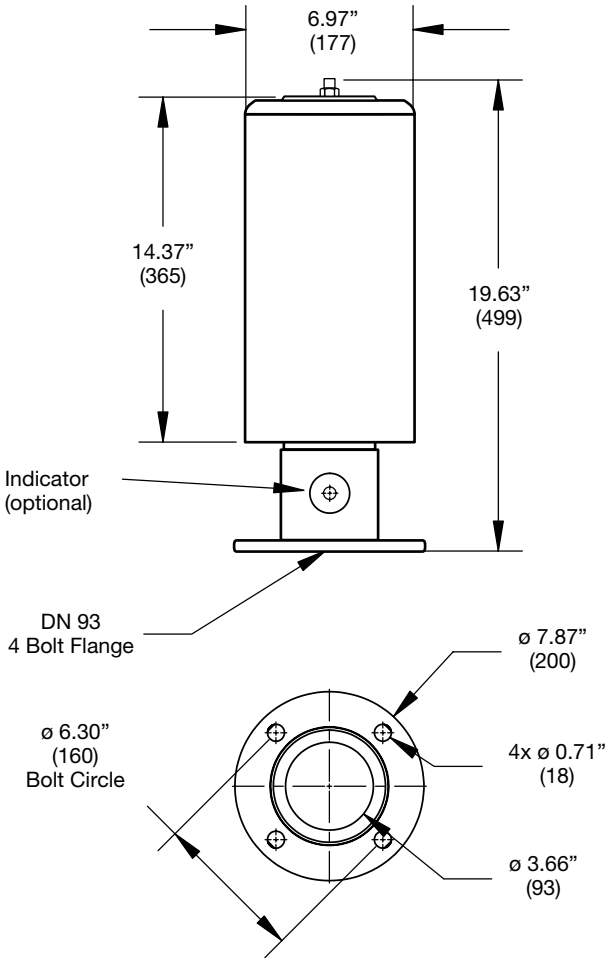

Dimensions are for general information only, all critical dimensions should be verified by requesting a certified print.
Dimensions are in inches/(mm)

Replacement Elements

Micron	Model Code	Part No.
1	0008L001BN4	01266598
2	0008L002BN4	01265021

Note: Low temperature options available. All breathers are available with special options and materials. Please contact the factory.

BF 9 Series

Breathers with Oil Mist Trap

Specifications

- Maximum flow rate - 528 scfm / 3960 gpm at 0.01 bar
- Aluminum housing
- Replaceable element
- 2 µm Air Filter
- 8 bolt DN 125 flange

Hydraulic Symbols

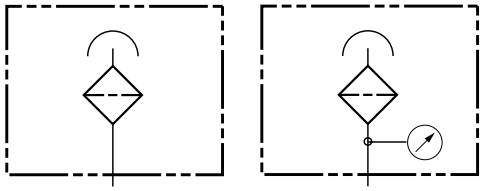

Standard with Indicator

Model Code

BF BN 9 F 2 A 1.0

Filter Type
BF = Breather

Filter Element Material
BN = Betamicron® Element

Size
9

Type of Connection
F = Flanged

Filtration Rating *(micron)*
2 = 2µm Air Filtration

Gauge Options
A = Without Indicator
K = With Indicator Gauge
Range: -14.5 to 9 psi (-1 to 0.6 bar)

Modification Number
1.0 = Standard

Oil Mist Trap

The oil mist in the filter is collected in a "drip tray" and is returned safely to the tank, or it can be drained via an oil drain plug.
No oil runs down onto the top of the tank.

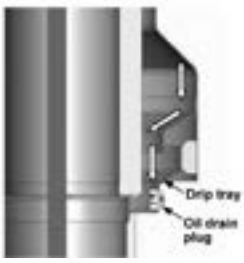

Dimensions

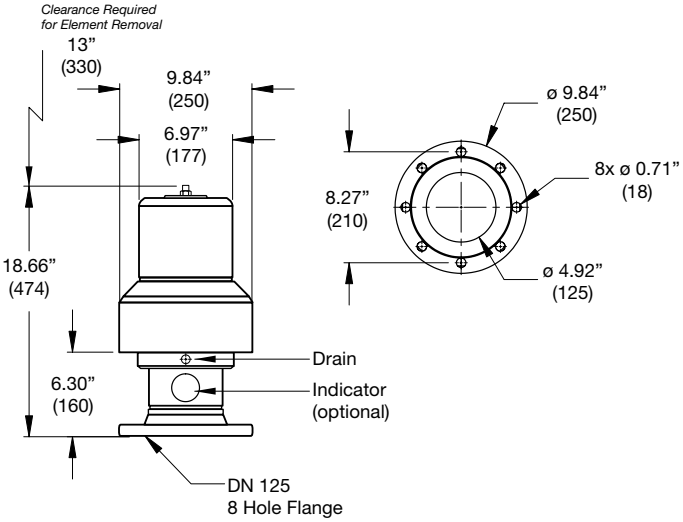

Dimensions are for general information only, all critical dimensions should be verified by requesting a certified print.
Dimensions are in inches/(mm)

Replacement Elements

Micron	Model Code	Part No.
2	0009L002BN	01287471

Note: Low temperature options available. All breathers are available with special options and materials. Please contact the factory.

BL Series

Spin-on Breathers

Specifications:

- Maximum flow rate: 110 scfm /850 gpm
- 3 or 10 micron
- Steel Canister
- 10 micron Betamicron®
- Replaceable element

Hydraulic Symbols

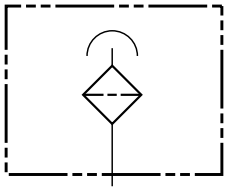

Dimensions

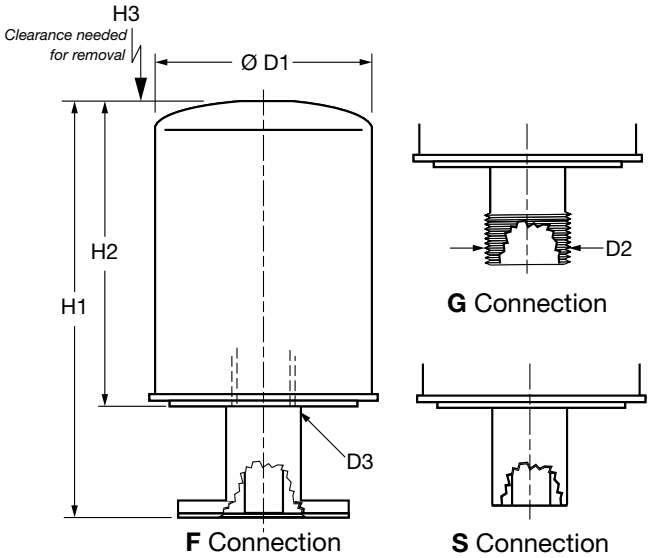

Size	ø D1	D2 NPT	D3	H1 (F or S)	H1 (G)	H2	H3
BL...80	3.67 (93)	3/4”	1”-12UNF-2B	-	7 (178)	5.4 (137)	0.75 (19)
BL...160	5.00 (127)	1 1/4”	1 1/2”-16UN-2B	9.25 (235)	8.75 (222)	7 (178)	1.00 (25.4)
BL...180	5.00 (127)	1 1/4”	1 1/2”-16UN-2B	13.25 (337)	12.75 (324)	11 (279)	1.00 (25.4)
BLT...160	5.33 (136)	1 1/4”	1 1/2”-16UN-2B	9.25 (235)	8.75 (222)	7 (178)	1.00 (25.4)

Notes:
1. Dimensions are in inches/(mm).
2. Dimensions are for general information only, all critical dimensions should be verified by requesting a certified print.

Model Code

BL P 160 G 10 W 2.0

Filter Type
- BL = Spin-on Breather
- BLT = Spin-on Breather with Dehumidifying Element *(size 160 only)(in 3 micron only)*

Filter Element Material
- P = Impregnated Paper
- BN = Betamicron®
- M = Desiccant *(type BLT only)*

Size
- 080 = 35 scfm (250 gpm) max.
- 160 = 110 scfm (850 gpm) max.
- 180 = 110 scfm (850 gpm) max.

Type of Connection
- G = Threaded
- F = Flanged (DIN 24557/T2)
- S = Weld Fitting

Filtration Rating *(micron)*
- 3 = 3µm Air Filtration *(paper only)*
- 5 = 5µm Air Filtration *(Betamicron Only)*
- 10 = 10µm Air Filtration

Gauge Options
- W = Without Indicator

Type Connection

		Type	G(Threaded)	F(Flanged)	S(Welded)
1.0	=	BLT 160	1 1/4” NPT	DIN 24557/T2	Weld Fitting
2.0	=	160/180	1 1/4” NPT	DIN 24557/T2	Weld Fitting
3.0	=	080	3/4” NPT	-	-

Modification Number *(standard)*

Mounting Hole Pattern for Flange Connection (F)

(Flange Interface to DIN 24557/T2)

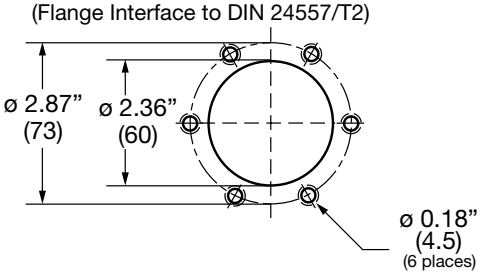

Note: Low temperature options available. All breathers are available with special options and materials. Please contact the factory.

BL Series

Spin-On Breathers (Components)

Replacement Elements

(Paper Media)

Size	3 Micron		10 Micron	
	Part. No.	Model Code	Part No.	Model Code
080	02058079	0080 MA 003 P	02058058	0080 MA 010 P
160	02058114	0160 MA 003 P	02058116	0160 MA 010 P
180	02057912	0180 MA 003 P	02058121	0180 MA 010 P

(Betamicron Media)

Size	3 Micron		5 Micron		10 Micron	
	Part. No.	Model Code	Part No.	Model Code	Part No.	Model Code
080	N/A		02059423	0080 MA 005 BN	02059424	0080 MA 010 BN
160	02059434	0160 MA 003 BN	02059435	0160 MA 005 BN	02059436	0160 MA 010 BN
180	02059438	0180 MA 003 BN	02059439	0180 MA 005 BN	02059440	0180 MA 010 BN

(Desiccant Media)

Size	3 Micron	
	Part. No.	Model Code
BLT 0160	01265765	0160 MU 003 M

Adapters

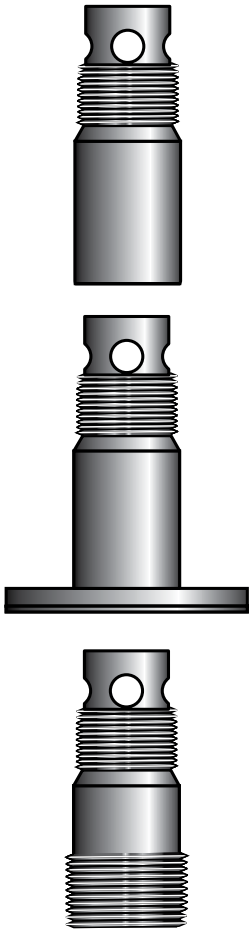

(G, Threaded)

Size	Thread Size	Part No.	Model Code
080	3/4" NPT	02064393	ADAPTER BL 080 G 3/4" NPT NBR
160	1-1/4" NPT	02064394	ADAPTER BL 160/180 G 1 1/4" NPT NBR
180			

(F, Flanged)

Size	Part No.	Model Code
080	N/A	
160	00407646	ADAPTER BL 160/180 F (PHOS)
180	02073864	ADAPTER BL 160/180 F (PHOS) (w/ Cardboard Gasket)

(Replacement Gaskets)

Part No.	Model Code
00247102	ELF 3 GASKET 6 HOLE CARDBD 83X58X1

(S, Weld Fitting)

Size	Part No.	Model Code
080	N/A	
160	004016311	ADAPTER BL 160/180 S (PHOS)
180		

Note: Low temperature options available. All breathers are available with special options and materials. Please contact the factory.

BDE Series

Drymicron

Description

Desiccant Breather for removing moisture from air entering gearboxes, reservoirs, fuel tanks, etc.

Features

- 2-Stage Adsorbent Filling
- Distribution of Flow by special design of the inner components
- Star-pleated air filter element (2 µm) reduces/prevents dirt and dust ingress into tank
- Integrated anti-splash tool to protect the absorbent from oil contamination
- Replacement cartridges
- Color Indication: When maximum adsorption is reached, the silica gel turns from purple to orange
- Optional visual indicator

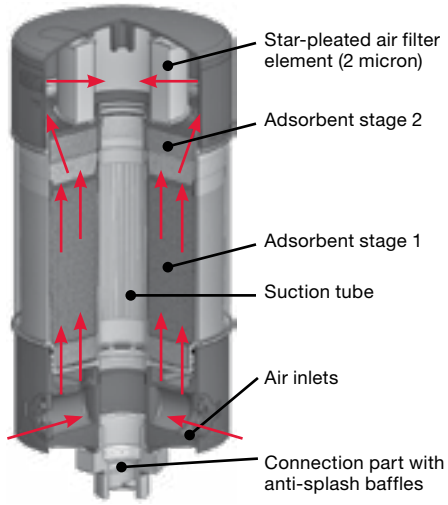

Benefits

- Extending the life cycle of the lube oil
- Minimize component wear, down time and repairs due to moisture
- Minimize oil oxidation, additive depletion and freezing due to moisture
- Minimize corrosion
- Extended oil filter life

Hydraulic Symbols

BDE with valves

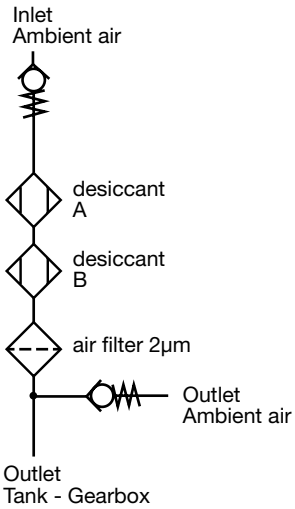

BDE without valves

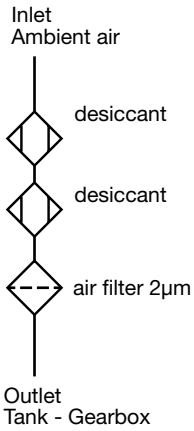

Advantages

Water Absorption Efficiency

% advantage of water capacity of BDE vs. Competitor

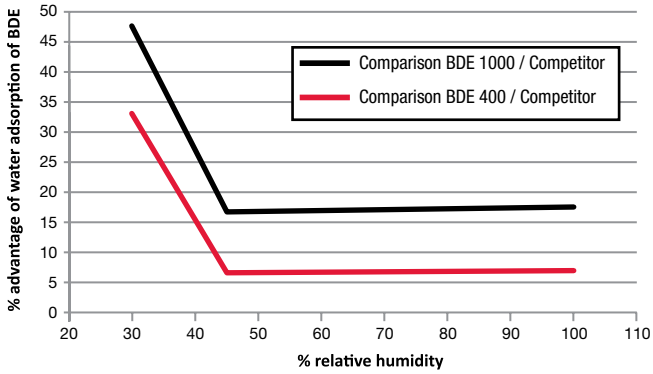

Water Adsorption Efficiency

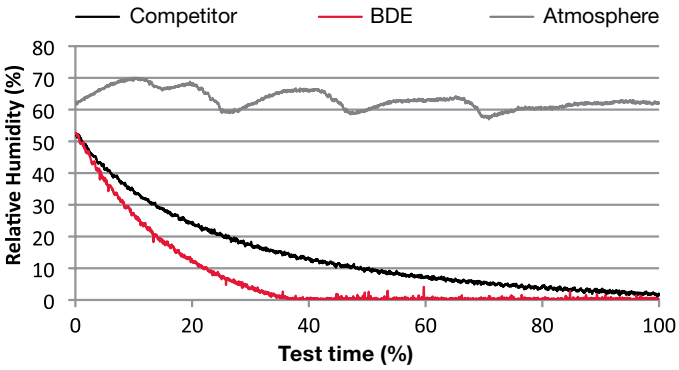

Note: Low temperature options available. All breathers are available with special options and materials. Please contact the factory.

Breather Dimensions

Size	C	Ø D	L	Optimum air flow rate * (l_{air}/min)	Max. drying capacity for avg. humidity (m^3_{air})	Max. drying capacity for high humidity (m^3_{air})	Water Retention Capacity	Weight
200	3.50 (89)	5.35 (136)	8.86 (225)	10	10	6	0.25l	3.75 (1.7)
400			11.97 (304)	20	25	15	0.50l	5.07 (2.3)
1000			15.12 (384)	35	42	25	0.75l	6.61 (3.0)

* Air flow rate with the highest drying efficiency. Dimensions are in inches/(mm) and lbs./(kg)

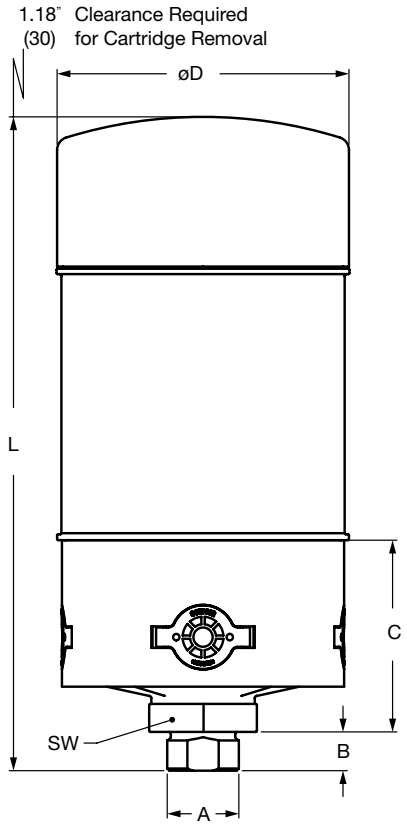

Mounting Hole Patterns

ELF 3

(flange interface to DIN 24557/T2)

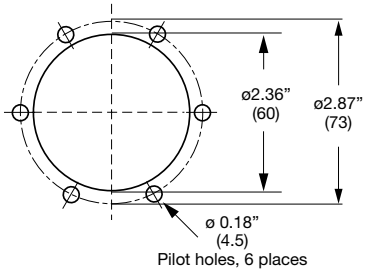

ELF Filler Basket

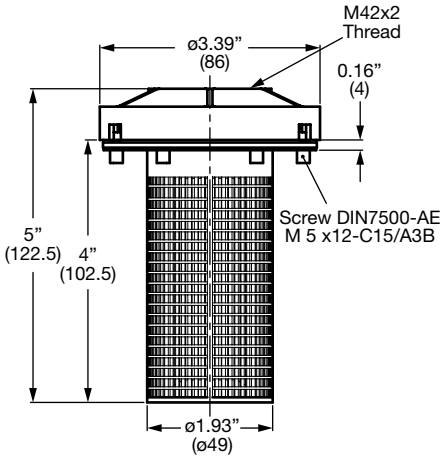

Connection A	Thread length B	AF with SW
1" Slip fit connection Ø33.4	0.71 (18)	1.97 (50)
G1"	0.71 (18)	1.97 (50)
NPT 1"	0.71 (18)	1.97 (50)
NPT 2"	0.94 (24)	2.56 (65)
Flange adapter DIN 24557/T2	0.79 (20)	1.97 (50)
M42x2	0.71 (18)	1.97 (50)

Model Code

BDE 400 G 2 W 1 . X / -RV0.02

Filter Type
BDE

Size
200, 400, 1000

Type of Connection
G = Thread BSPP
N = Thread NPT
F = Flange (to DIN 24557)
S = Slip Fit
M = Thread metric

Filtration Rating *(micron)*
2 = 2 µm absolute

Clogging Indicator
W = Without port, no clogging indicator
UBM = Vacuum indicator

Type Code

Connection Type

	G	N	F	S	M
1 =	1" BSPP	1" NPT	DIN 24557/T 2	1"	M42x2
2 =	—	2" NPT	—	—	—

Modification Number

Supplementary Details
RV0.003 = Relief valve with 0.04 psi (0.003 bar) pressure setting
RV0.02 = Relief valve with 0.30 psi (0.02 bar) pressure setting
ELF = With filler basket (only for connection type F flange)

Replacement Cartridge

BDE 400 X 2 W 0 . X

Filter Type
BDE

Size
200, 400, 1000

Type of Connection
X = Replacement cartridge

Filtration Rating *(micron)*
2 = 2 µm absolute

Clogging Indicator
W = Without port, no clogging indicator
UBM = Vacuum indicator

Type Code
0 = Replacement cartridge

Modification Number

Not all combinations are available

Note: Low temperature options available. All breathers are available with special options and materials. Please contact the factory.

BDZ Series

Mini DRYMICRON

Dimensions

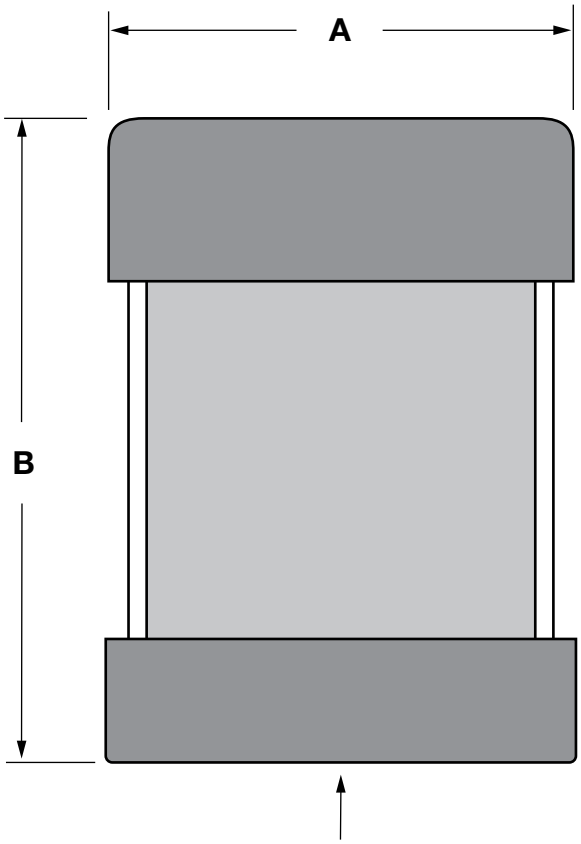

1/2” NPT Female Connection
02082356 has 3/4” male connection

Description

HYDAC BDZ Series breathers are designed for applications when space is limited. They can replace all standard breather caps.

HYDAC BDZ Series breathers prevent dirt and water vapor from entering the gearbox or hydraulic system.

Features

- 1/2” NPT female threaded mounting hole *(1.0 models only)*
- 3/4” NPT male fitting *(2.0 model only)*
- All models are rated for 10 scfm airflow.

Benefits

- Minimize rust & acid corrosion
- Reduce component wear
- Reduce maintenance cost
- Prolong fluid life
- Reduce oil oxidation
- Enhance lubrication
- Rated Airflow - 75 gpm / 10 scfm

Model	H2O Capacity lbs (ltr)	Part Number	A	B	Weight (lbs)
BDZ 015 G 2 W 1.0	0.032 (0.015)	02080980	2.00”	2.25”	0.19
BDZ 025 G 2 W 1.0	0.056 (0.025)	02080981	2.00”	3.50”	0.27
BDZ 045 G 2 W 1.0	0.104 (0.047)	02080982	3.25”	2.25”	0.50
BDZ 085 G 2 W 1.0	0.180 (0.082)	02080983	3.25”	3.50”	0.75
BDZ 085 G 2 W 2.0	0.180 (0.082)	02082356	3.25”	3.50”	0.75

Notes:
1. Dimensions are in inches (mm) and lbs (kg).
2. Dimensions are for general information only, all critical dimensions should be verified by requesting a certified print.

Note: Low temperature options available. All breathers are available with special options and materials. Please contact the factory.

ELF...3 & ELF...4 Series

Filler Breathers

Specifications

- Maximum flow rate - 31 scfm / 230 gpm at 0.04 bar
- Epoxy coated steel cap
- Zinc-plated internals
- 3 or 10 micron
- 500 micron plastic filler basket *(standard)*
- Bayonet connection to access fill port
- Installs via 3 or 6 bolt circle *(bolts included)*
- Locking tabs *(optional - ELFL 3 only)*
- Pressurized breather with relief valve *(optional - ELF3 only)*
- Phenolic resin impregnated filter element

Hydraulic Symbols

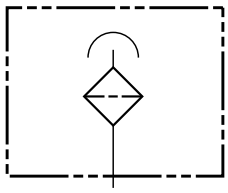

standard

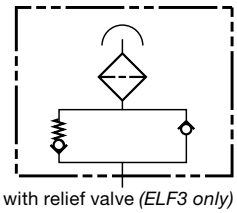

with relief valve *(ELF3 only)*

Model Code

ELF P 3 F 10 W 1 . 0 / _

Filter Type
- ELF = Filler Breather
- ELFL = Lockable Filler Breather *(not available for size 4)*

Filter Element Material
- P = Phenolic Resin Impregnated Paper

Size
- 3 = 31 scfm (230 gpm) max.
- 4 = 12 scfm (90 gpm) max.

Type of Connection
- F = Flanged

Filtration Rating *(micron)*
- 3 = 3µm Air Filtration
- 10 = 10µm Air Filtration

Gauge Options
- W = Without Indicator

Type
- 1 = ELF 3 and 4
- 4 = ELF 3 RV; Reseat Pressure 6 psi (0.4 bar)
- 5 = ELF 3 RV; Reseat Pressure 10 psi (0.7 bar)
- 6 = ELF 3 RV; Reseat Pressure 3 psi (0.2 bar)

Modification Number
- 0 = Standard

Supplementary Details
- RV = Relief Valve *(for use on Pressurized Tanks; ELFP3 only)*
- SO169H3.5 = 3.5 inch plated steel filler basket
- SO169H6 = 6 inch plated steel filler basket *(ELFP3 only)*
- SO169H8 = 8 inch plated steel filler basket *(ELFP3 only)*

Dimensions

ELF

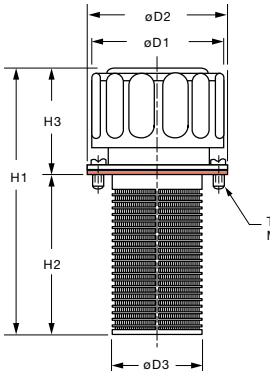

ELFL *(with locking tab)*

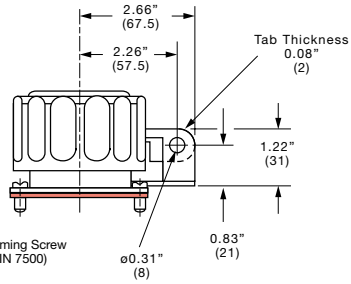

Size	ø D1	ø D2	ø D3	H1	H2	H3
ELF 3	2.99" (76)	3.27" (83)	2.05" (52)	6.26" (159)	3.80" (96.5)	2.46" (62.5)
ELF 4	1.73" (44)	1.97" (50)	1.10" (28)	5.32" (135)	3.21" (81.5)	2.11" (53.5)

Mounting Hole Patterns

ELF 3

(flange interface to DIN 24557/T2)

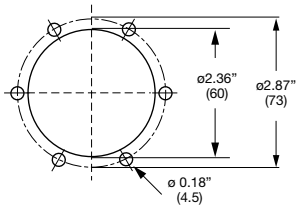

ELF4

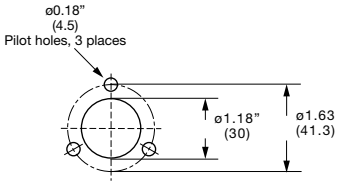

Note: Low temperature options available. All breathers are available with special options and materials. Please contact the factory.

PN#02080105 / 01.17 / ACC1603-1753

ELF 3 Series

Filler Breather Parts

ELF 3 Breather Caps

Part	Model Code	Part No.
Breather Cap	ELF P 3 CAP 10 W 1.0 W/CHAIN	02080124
Breather Cap with 3 psi relief valve	ELF P 3 CAP 10 W 6.0/RV W/CHAIN	02080125

6 bolt Bayonet Flange

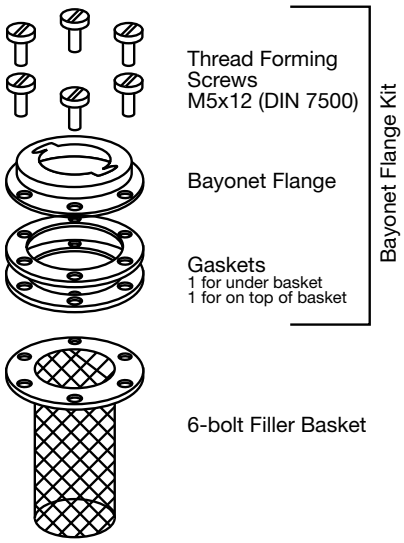

Part	Model Code	Part No.
Bayonet Flange Kit	ELF3 BAYONET FLANGE KIT ASSY	1200002680

Note: Parts not sold separately

Part	Model Code	Part No.
3.5” Steel Filler Basket	ELF3 STRAINER BASKET 3.5” PLATED STEEL	02701474
6” Steel Filler Basket	ELF3 STRAINER BASKET 6” PLATED STEEL	02701475
8” Steel Filler Basket	ELF3 STRAINER BASKET 8” PLATED STEEL	02701441
4” Plastic Filler Basket	ELF3 STRAINER BASKET 4” PLASTIC	01202916

Weld Neck Bayonet Flange

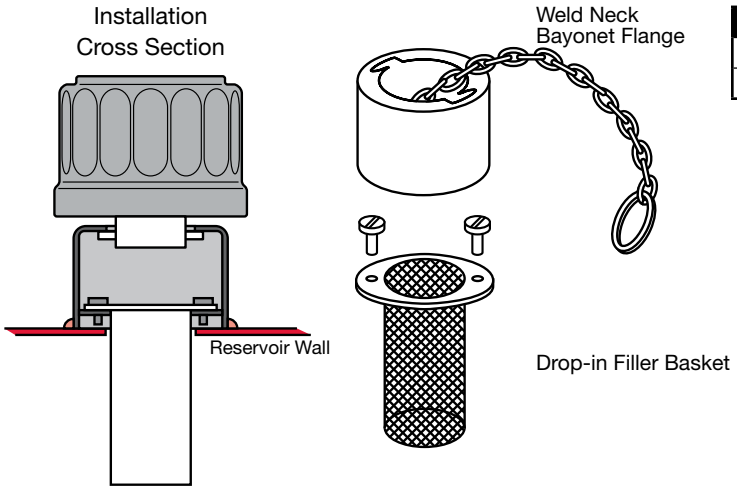

Part	Model Code	Part No.
Weld Neck	ELF3 WELD NECK W/CHAIN	02080126
Drop-in Strainer	ELF3 WELD NECK STRAINER	02078939

Note: Low temperature options available. All breathers are available with special options and materials. Please contact the factory.

ELF...10 Series

Filler Breathers

Specifications

- Maximum Flow Rate - 13 scfm / 100 gpm at 0.04 bar
- Durable synthetic material (PA6)
- Filtration rating 3 µm
- Buna N O-Ring
- Threaded connection to access fill port
- Optional dipstick *(contact factory)*
- Optional customer logo *(contact factory)*
- Optional pressurized breather with relief valve
- Optional anti-splash device
- -22° to 212°F (-30° to 100°C)
- Phenolic resin impregnated filter element

Hydraulic Symbols

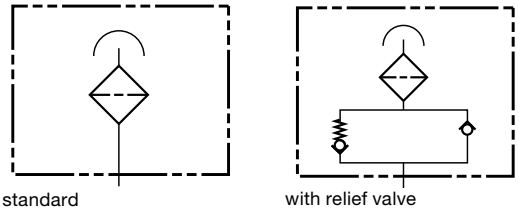

Model Code

ELF P 10 F 3 W 1.0 / - RV0.4

Filter Type
ELF = Filler Breather

Filter Element Material
P = Phenolic Resin Impregnated Paper

Size
10

Connection
F = Flanged connection

Filtration Rating *(micron)*
3 = 3µm air filtration

Gauge Option
W = without indicator

Type
1 = Flanged connection (see dimensions above)

Modification Number
0 = Standard

Options
(omit) = Standard
RV0.2 = Relief Pressure, 3 psi (0.2 bar)
RV0.4 = Relief Pressure, 6 psi (0.4 bar)
RV0.7 = Relief Pressure, 10 psi (0.7 bar)
AS = Anti-splash protection *(only for version without RV)*

Dimensions

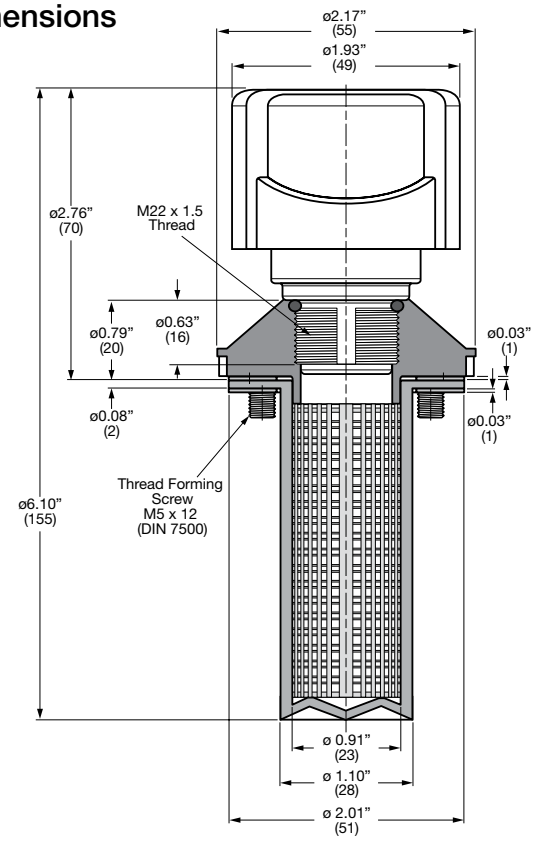

Replacement Cap Only *(with M22x1.5 thread)*

Model	Part No.
BF P 10 M 3 W 1.0	01284377
BF P 10 M 3 W 1.0 /-AS	01284378
BF P 10 M 3 W 1.0 /-RV0.2	01284379
BF P 10 M 3 W 1.0 /-RV0.4	01284380
BF P 10 M 3 W 1.0 /-RV0.7	01284381

Mounting Hole Pattern

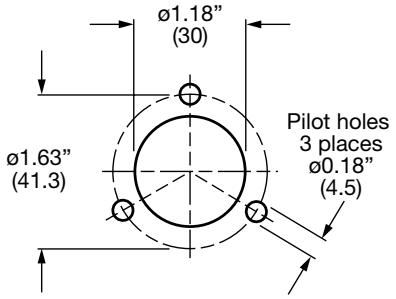

Note: Low temperature options available. All breathers are available with special options and materials. Please contact the factory.

ELF...30 Series

Filler Breathers

Specifications

- Maximum flow rate - 31 scfm / 230 gpm at 0.04 bar
- Durable synthetic material (PA6)
- 3 or 10 micron
- Buna N O-Ring
- Threaded connection to access fill port
- Installs via 6-bolt circle *(bolts included)*
- Optional dipstick *(contact factory)*
- Optional customer logo *(contact factory)*
- Optional pressurized breather with relief valve
- Optional anti-splash device
- -22° to 212°F (-30° to 100°C)
- Phenolic resin impregnated filter element

Hydraulic Symbols

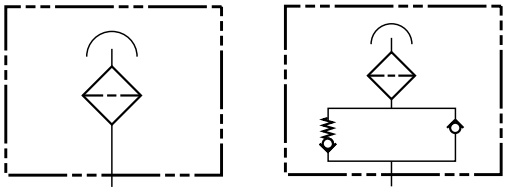

standard

with relief valve

Model Code

ELF P 30 F 3 W 1 . 0 / _

Filter Type
ELF = Filler Breather

Filter Element Material
P = Phenolic Resin Impregnated Paper

Size
30

Type of Connection
F = Flanged Connection

Filtration Rating *(micron)*
3 = 3µm Air Filtration
10 = 10µm Air Filtration

Gauge Options
W = Without Indicator

Type
1 = Flanged Connection to DIN 24557/T2

Modification Number
0 = Standard

Supplementary Details
(omit) = Standard
RV0.2 = Relief Pressure, 3 psi (0.2 bar)
RV0.4 = Relief Pressure, 6 psi (0.4 bar)
RV0.7 = Relief Pressure, 10 psi (0.7 bar)
AS = Anti-splash protection *(only for version without RV)*

Dimensions

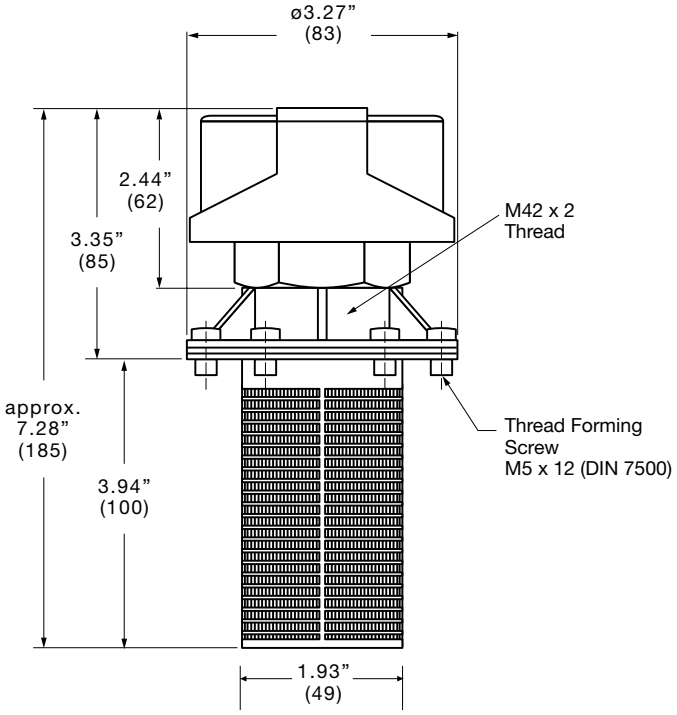

Replacement Cap Only *(with M42x2 thread)*

Model	Part No.
BF P 30 M 3 W 1.0	01286298
BF P 30 M 3 W 1.0 /-AS	03246445
BF P 30 M 3 W 1.0 /-RV0.2	01291009
BF P 30 M 3 W 1.0 /-RV0.4	01290498
BF P 30 M 3 W 1.0 /-RV0.7	01294026

Mounting Hole Pattern *(flange interface to DIN 24557/T2)*

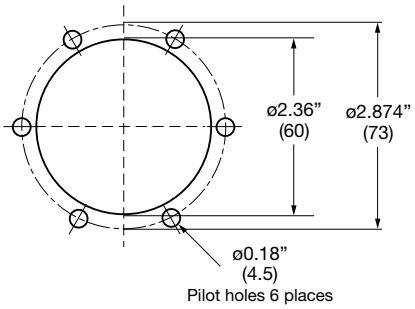

Note: Low temperature options available. All breathers are available with special options and materials. Please contact the factory.

ELF...7 Series

Filler Breathers

Specifications

- Maximum flow rate - 63 scfm / 475 gpm at 0.04 bar
- Durable synthetic material (PA6)
- 3 or 10 micron
- 500 micron plastic filler basket
- Replaceable element Phenolic resin impregnated paper
- Removable lid to access fill port
- Installs via 6-bolt circle *(bolts included)*
- Differential gauge *(optional)*
- -22° to 212°F (-30° to 100°C)

Hydraulic Symbols

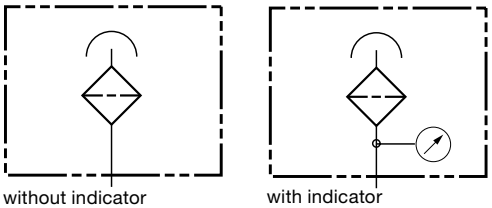

without indicator with indicator

Model Code

ELF P 7 F 3 K 1 . 0

Filter Type
ELF = Filler Breather

Filter Element Material
P = Phenolic Resin Impregnated Paper

Size
7

Type of Connection
F = Flanged

Filtration Rating *(micron)*
3 = 3µm Air Filtration
10 = 10µm Air Filtration

Gauge Options
W = Without Indicator
K = With Gauge (Range: -14.5 to 9 psi)

Connection Type
1 = Flange interface to DIN 24557/T2

Modification Number
0 = Standard

Dimensions

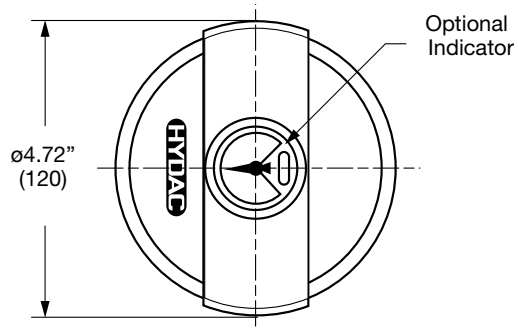

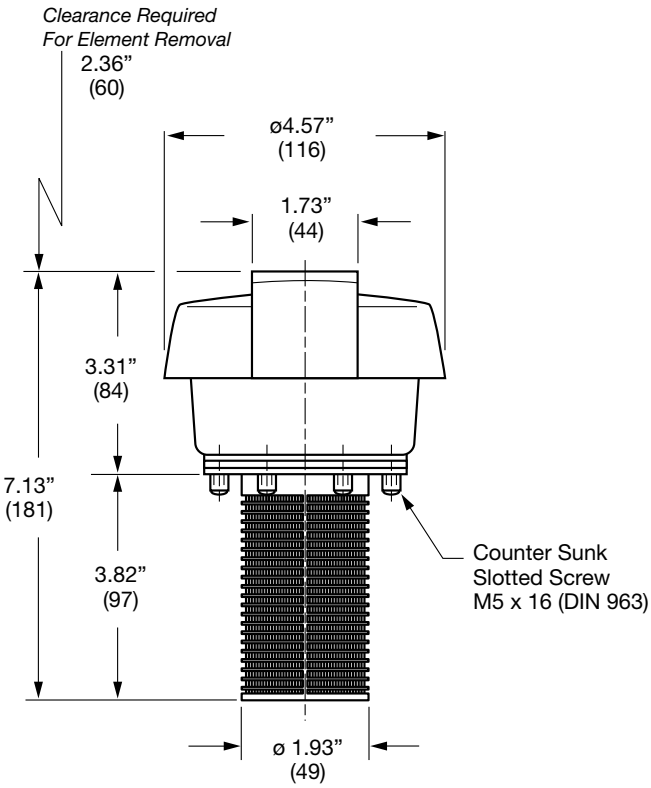

Replacement Elements

Micron	Model Code	Part No.
3	0007L003P	00310948
10	0007L010P	00310485

Mounting Hole Pattern

(flange interface to DIN 24557/T2)

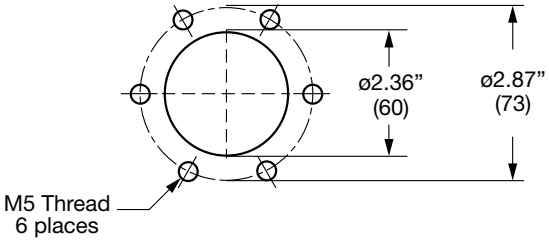

Note: Low temperature options available. All breathers are available with special options and materials. Please contact the factory.

PN#02080105 / 01.17 / ACC1603-1753

ELF...72 Series

Filler Breathers

Specifications

- Maximum flow rate - 74 scfm / 555 gpm at 0.04 bar
- Durable synthetic material (PA6)
- 3 or 10 micron
- 500 micron plastic filler basket
- Replaceable element
- Phenolic resin impregnated paper
- Removable lid to access fill port
- Installs via 6-bolt circle (bolts included)
- Differential gauge (optional)
- -22° to 212°F (-30° to 100°C)

Hydraulic Symbols

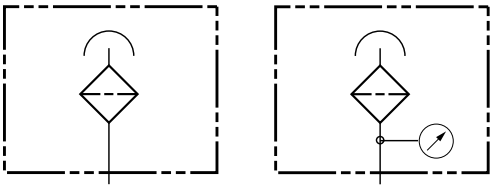

without Indicator without Indicator

Model Code

ELF P 72 F 3 W 1.0

Filter Type
ELF = Filler Breather

Filter Element Material
P = Phenolic Resin Impregnated Paper

Size
72

Type of Connection
F = Flanged

Filtration Rating *(micron)*
3 = 3µm Air Filtration
10 = 10µm Air Filtration

Gauge Options
W = Without Indicator
K = With Gauge (Range: -14.5 to 9 psi)

Connection Type
1 = Flange interface to DIN 24557/T2

Modification Number
0 = Standard

Dimensions

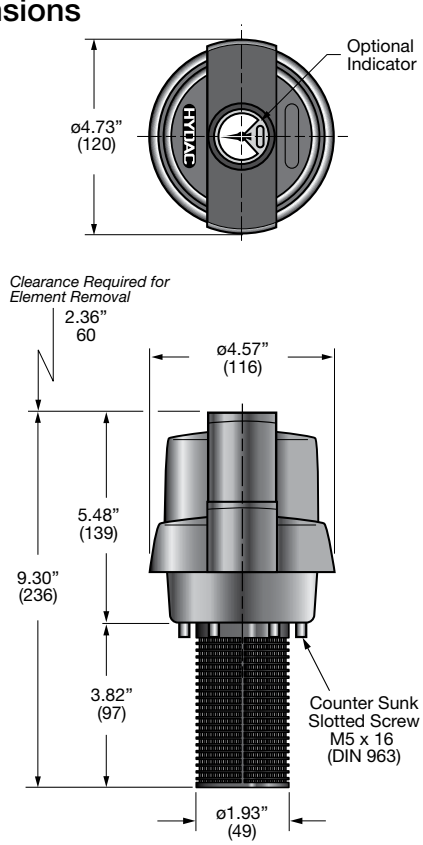

Replacement Element

Micron	Model Code	Part No.
3	0072L003P	1293285

Mounting Hole Pattern

(flange interface to DIN 24557/T2)

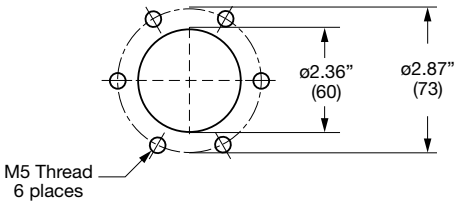

Note: Low temperature options available. All breathers are available with special options and materials. Please contact the factory.

ELF 5 Series

Filler Breathers

Specifications

- Maximum flow rate - 105 scfm / 790 gpm at 0.01 bar
- Steel element housing
- 240 mm Zinc-plated metal filler basket
- 3 or 10 micron
- Replaceable element
- Removable Lid to access fill port
- Installs via threaded connection *(weld ring optional)*
- Phenolic resin impregnated filter element

Hydraulic Symbols

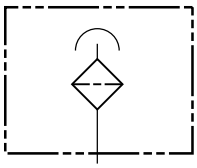

Dimensions

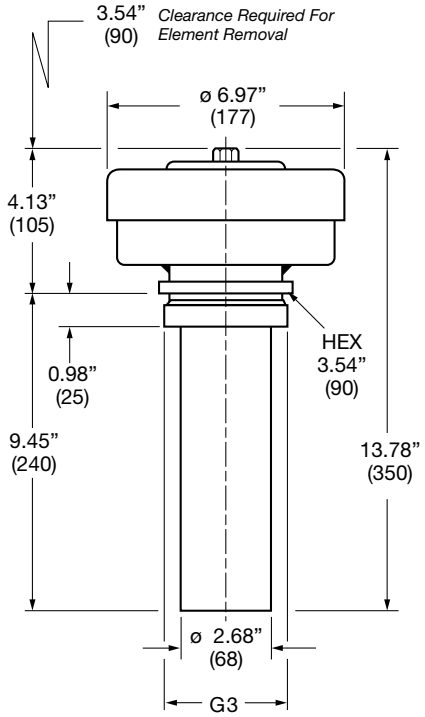

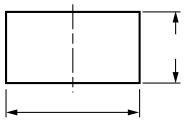

ELF5...2.0 2.56" (65)

ELF5...3.0 2.80" (71)

Reservoir opening for weld ring

ELF5...2.0 ø 3.46" (88)

ELF5...3.0 ø 3.98" (101)

Model Code

ELF P 5 G 3 W 2 . 0 / _

Filter Type
ELF = Filler Breather

Filter Element Material
P = Phenolic Resin Impregnated Paper

Size
5

Type of Connection
G = Threaded *(matching threaded weld ring available see supplementary details below)*

Filtration Rating *(micron)*
3 = 3µm Air Filtration
10 = 10µm Air Filtration

Gauge Options
W = Without Indicator

Connection Type
2 = G 2 1/2 threaded connection
3 = G 3 threaded connection

Modification Number
.0 = Standard

Supplementary Details
NO WELD RING = without weld ring
W/ WELD RING = with weld ring

Replacement Elements

Micron	Model Code	Part No.	Qty Req.
3	0005L003P	00309450	1
10	0005L010P	00306097	1

Weld Rings

Size	Model Code	Part No.
G 2 1/2	RING WELD ELF 5 G 2 1/2	02065053
G 3	RING WELD ELF 5 G 3	02065054

Notes:
1. Dimensions are in inches (mm).
2. Dimensions are for general information only, all critical dimensions should be verified by requesting a certified print.

Note: Low temperature options available. All breathers are available with special options and materials. Please contact the factory.

ELF 52 Series

Filler Breathers

Specifications

- Maximum flow rate - 176 scfm / 1320 gpm at 0.01 bar
- Steel housing
- 3 or 10 micron
- Replaceable element
  (uses 2 of the standard size 5 elements)
- Phenolic resin impregnated paper
- Installs via threaded connection
  (weld ring optional)

Hydraulic Symbols

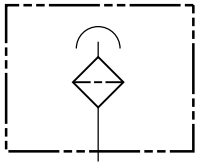

Dimensions

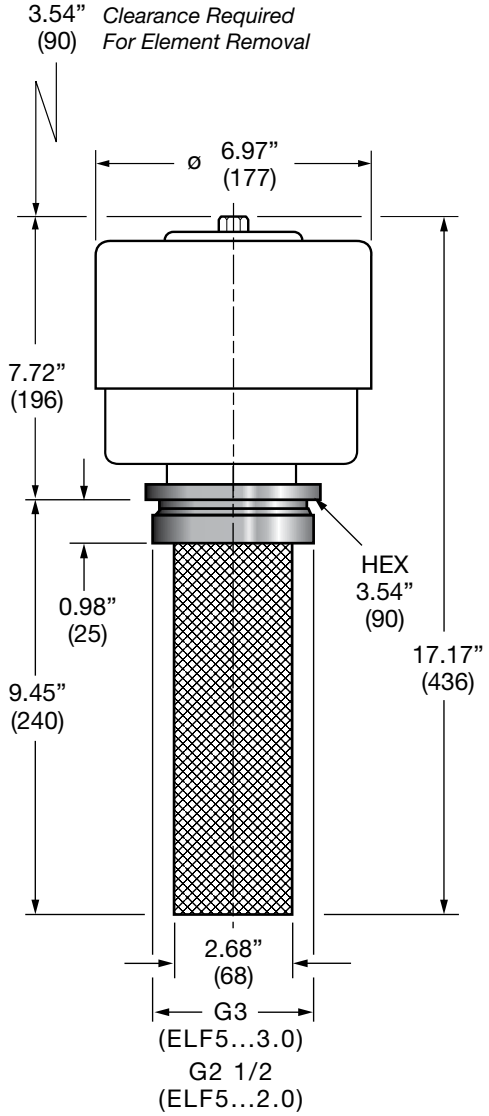

Notes:
1. Dimensions are in inches (mm).
2. Dimensions are for general information only, all critical dimensions should be verified by requesting a certified print.

Model Code

ELF P 52 G 3 W 2 . 0 / _

Filter Type
ELF = Breather

Filter Element Material
P = Phenolic Resin Impregnated Paper

Size
52

Type of Connection
G = Threaded

Filtration Rating *(micron)*
3 = 3µm Air Filtration
10 = 10µm Air Filtration

Gauge Options
W = Without Indicator

Connection Type
2 = G 2 1/2 Threaded Connection
3 = G 3 Threaded Connection

Modification Number
.0 = Standard

Supplemental Details
NO WELD RING = Without Weld Ring
W/ WELD RING = With Weld Ring

Replacement Elements

Micron	Model Code	Part No.	Qty Req.
3	0005L003P	00309450	2
10	0005L010P	00306097	2

Weld Rings

Size	Model Code	Part No.
G 2 1/2	RING WELD ELF 5 G 2 1/2	02065053
G 3	RING WELD ELF 5 G 3	02065054

Note: Low temperature options available. All breathers are available with special options and materials. Please contact the factory.

Notes

C2

Other Reservoir Accessories

In addition to Breathers HYDAC offers; suction strainers, fluid level indicators, gauge isolators, and test points. Our suction strainers are designed and built in the USA. We offer a large selection of fluid level indicators and options for level indicators.

SFE In-Tank

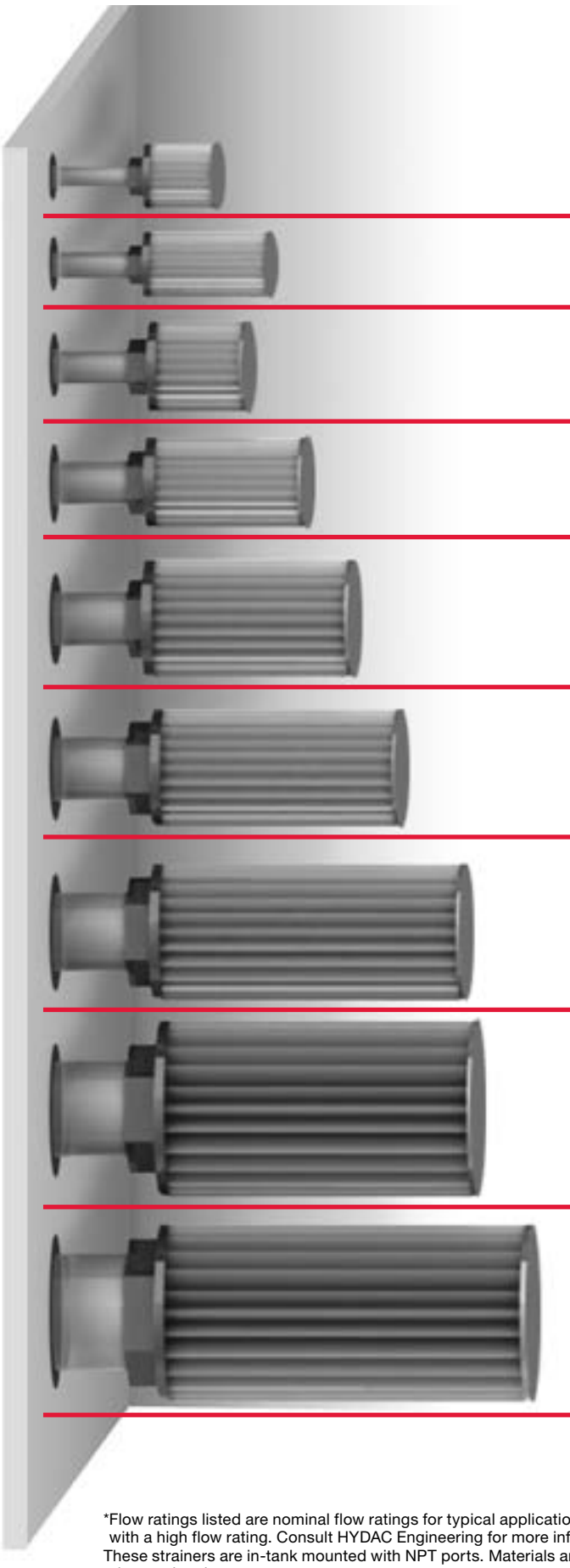

Size	Nominal flow* (gpm)	Connection NPT	Overall Length	Bypass
SFE 11	3	3/8”	2.7”	N/A
SFE 15	5	1/2”	4.2”	Optional
SFE 25	8	3/4”	2.7”	Optional
SFE 50	10	1”	2.7”	Optional
SFE 80	20	1 1/4”	3.5”	Optional
SFE 100	30	1 1/2”	3.5”	Optional
SFE 180	50	2”	4.0”	Optional
SFE 280	75	2 1/2”	5.2”	Optional
SFE 380	100	3”	5.2”	Optional

*Flow ratings listed are nominal flow ratings for typical applications. High velocity/ low temperature applications may require a strainer with a high flow rating. Consult HYDAC Engineering for more information.
These strainers are in-tank mounted with NPT ports. Materials are plastic nut caps, stainless steel wire cloth, and plated steel support tubes and end caps.

HTMS Hose Barb

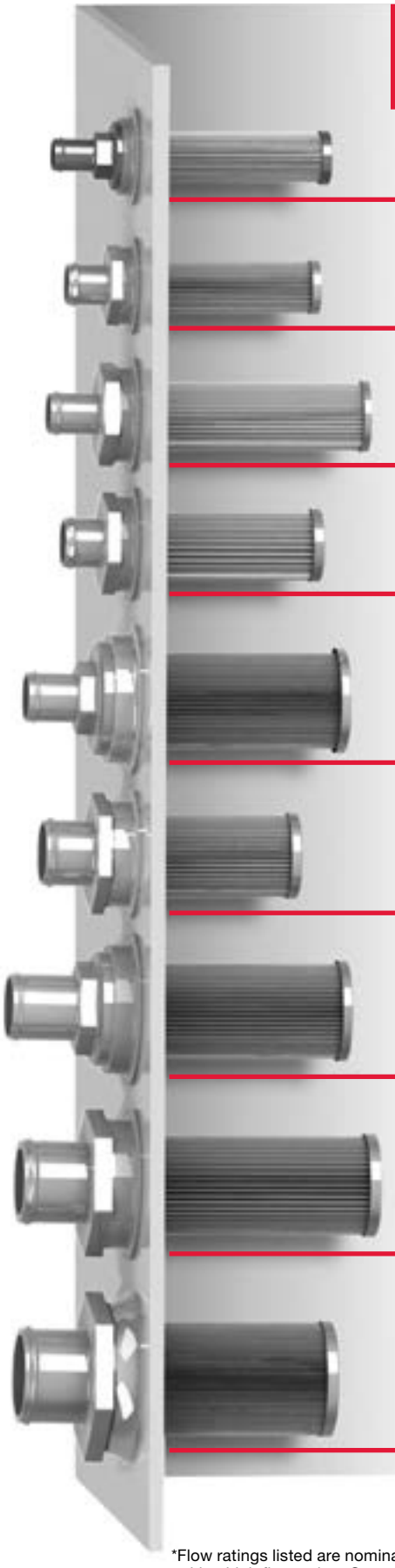

Size	Nominal flow* (gpm)	Connect. Pump Side	Connect. Tank Side	Overall Length	Install Length	Bypass
1” HB / SAE-24	8	1" HB	1-7/8"-12	9.3"	7.3"	Optional
1.25” HB / SAE-24	12	1.25" HB	1-7/8"-12	8.5"	6.9"	N/A
1.25” HB / SAE-32	15	1.25" HB	2-1/2"-12	10.5"	8.5"	Optional
1.5” HB / SAE-32	20	1.5" HB	2-1/2"-12	8.5"	6.9"	N/A
1.5” HB / SAE-48	25	1.5" HB	3-3/8"-12	10.3"	7.8"	Optional
2” HB / SAE-40	30	2" HB	2-7/8"-12	8.2"	6.3"	N/A
2” HB / SAE-48	40	2" HB	3-3/8"-12	10.7"	7.7"	Optional
2.5” HB / SAE-48	50	2.5" HB	3-3/8"-12	11.1"	8.5"	N/A
3” HB / SAE-48	75	3" HB	3-3/8"-12	9.7"	7.1"	N/A

*Flow ratings listed are nominal flow ratings for typical applications. High velocity/ low temperature applications may require a strainer with a high flow rating. Consult HYDAC Engineering for more information.
These stainers are externally mounted with SAE threaded tank connection. Materials are plated steel or aluminum nut caps, stainless steel wire cloth, and plated steel support tubes and end caps.

HTMS SAE

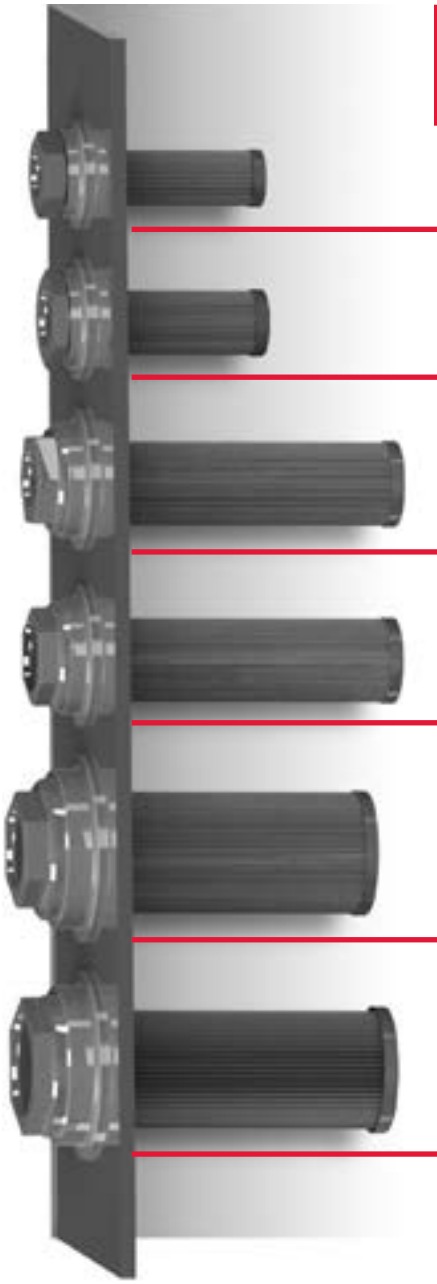

Size	Nominal flow* (gpm)	Connect. Pump Side	Connect. Tank Side	Overall Length	Install Length	Bypass
SAE-12 / SAE-20	5	1-1/16"-12	1-5/8"-12	5.5"	4.9"	Optional
SAE-16 / SAE-24	7	1-5/16"-12	1-7/8"-12	5.4"	5.0"	N/A
SAE-16 / SAE-32	9	1-5/16"-12	2-1/2"-12	9"	8.3"	Optional
SAE-20 / SAE-32	14	1-5/8"-12	2-1/2"-12	9"	8.3"	Optional
SAE-24 / SAE-48	21	1-7/8"-12	3-3/8"-12	8.8"	7.8"	Optional
SAE-32 / SAE-48	39	2-1/2"-12	3-3/8"-12	9.2"	8.3"	Optional

*Flow ratings listed are nominal flow ratings for typical applications. High velocity/low temperature applications may require a strainer with a high flow rating. Consult HYDAC Engineering for more information.
These stainers are externally mounted with SAE threaded tank connection. Materials are plated steel or aluminum nut caps, stainless steel wire cloth, and plated steel support tubes and end caps.

Weld Flange

SAE 6	SAE 8	SAE 12	SAE 16	SAE 20	SAE 24	SAE 32	SAE 48
9/16”-18	3/4”-16	1-1/16”-12	1-15/16”-12	1-5/8-12	1-7/8”12	2-1/2-12	3-3/8”12
2078493	2078494	2078495	2078496	2078497	2078482	2078483	2078484

For use with HTMS Hose Barb and SAE Stainers. Materials are low carbon steel suitable for all welding techniques.

SFE Series

In-Tank Suction Strainer Element

Description

HYDAC Suction Strainer Elements are designed for installation into suction lines of pumps. Extra caution should be taken to ensure that the suction elements are always mounted below the minimum oil level of the reservoir.

The suction strainer elements can be supplied with a bypass valve to reduce high pressure drops caused by contaminated elements or high viscosity fluids during cold starting. The bypass valve opens at 3 psi. For best results, suction strainer elements should be sized for clean element pressure drops of no higher than 0.5 to 0.7 psi.

HYDAC Suction Strainer Elements are manufactured using stainless steel wire screen media, plastic nut caps, and plated steel end caps and support tubes.

Suction strainer elements are only intended to protect hydraulic pumps against catastrophic failure caused by coarse contaminant.

Suction strainer elements should be inspected and cleaned regularly.

Suction strainer elements should not be used as the only filtration elements in a hydraulic system. Pressure filters and return line filters, with reasonable dirt holding capacity, must be installed to provide protection against component damage caused by fine contaminants.

Cleaning Procedure

Remove external build-up of contaminant with cleaning fluid in separate tank.

Flush element with clean solvent and blow through wire screen media with air.

Model Code

SFE 11 G 125 A 1 .0 /

Type of Element
SFE = In-Tank Suction Strainer Element

Size
11 = 3 gpm
15 = 5 gpm
25 = 8 gpm
50 = 10 gpm
80 = 20 gpm
100 = 30 gpm
180 = 50 gpm
280 = 75 gpm
380 = 100 gpm

Type of Connection
G = NPT Threaded Connection

Nominal Filtration Rating *(micron)*
125 = 149 µm – 100 Mesh Screen
74 = 74 µm – 200 Mesh Screen

Clogging Indicator *(not applicable)*
A = No clogging indicator

Type Number
1

Modification Number *(latest version always supplied)*
.0

Bypass Valve
(omit) = Without Bypass-Valve
BYP = With Bypass Valve (3 psi) *(not available for size 11)*

Hydraulic Data

Pressure Drop vs. Flow:

- Pressure drop will be < 2 psi when strainers are used within the recommended flow range, and with a standard hydraulic fluid with a viscosity of 141 SSU and specific gravity of 0.86.

Temperature:

- 15° to 180°F (-9° to 82°C)

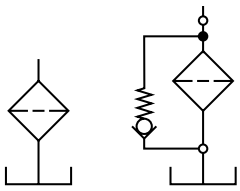

Without Bypass-Valve With Bypass-Valve

Dimensions

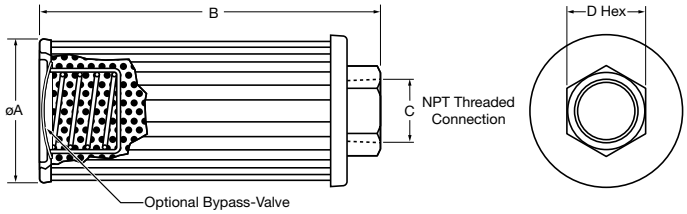

Size	Nominal Flow (gpm)	ØA	B	C (NPT)	D HEX	Media Area (sq. in.)
SFE 11	3	1.95	2.68	3/8	1.00	15
SFE 15	5	1.95	4.19	1/2	1.00	25
SFE 25	8	2.67	3.55	3/4	1.43	50
SFE 50	10	2.67	5.25	1	1.62	90
SFE 80	20	3.47	6.62	1 1/4	2.00	135
SFE 100	30	3.47	8.01	1 1/2	2.38	195
SFE 180	50	4.03	9.88	2	2.78	260
SFE 280	75	5.19	10.25	2 1/2	3.25	325
SFE 380	100	5.19	11.75	3	3.75	410

Notes:
1. Dimensions are in inches (mm).
2. Dimensions are for general information only, all critical dimensions should be verified by requesting a certified print.

MSS Series

Magnetic Suction Separators

Description

With the use of HYDAC's Magnetic Suction Separators, suction line filtration is provided without starving the pump. They offer unique protection for pumps from all sizes of ferrous particles, some of which have the potential of destroying a pump in a single pass. Large ceramic magnets are spaced along the length of the separator. All hydraulic fluid entering the pump must move at low velocity through a powerful magnetic field. This field traps large quantities of micronic ferrous particles. The viscous properties of the fluid can cause some non-ferrous particles to adhere to the magnetically trapped particles.

The MSS series is available in sizes ranging from one to three inches. The chart below shows the part numbers, specifications, and dimensions of available models.

The standard outer screen has adequate open area *(0.079 inch diameter perforations)* to eliminate the possibility of pump starvation.
All models are also available with a pleated 20 mesh screen *(850 µ)* by adding SS20 to the model number. *(Example MSS-1 SS20)*.

All units have a removable outer screen that can be cleaned and re-used to extend service life and minimize pressure drop.

Model Code

MSS - 1-1/2

Series

Connection Size
1" NPTF
1-1/4" NPTF
1-1/2" NPTF
2" NPTF
3" NPTF

Nominal Filtration Rating
(omit) = 74µm - 200 mesh screen
SS50 = 300µm - 50 mesh screen
SS20 = 850µm - 20 mesh screen

Dimensions

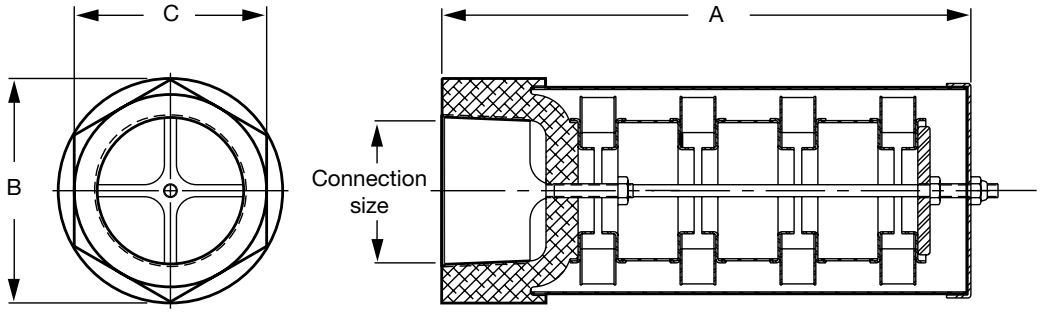

Model Number	Part No.	Connection Size	Max. Flow gpm (lpm)	Δ psi at Max. gpm	Dimensions		
					A	B*	C
MSS-1	02082431	1" NPT	15 (55)	0.05	5.25" (133)	3.25" (83)	1.62" (41)
MSS-1 1/4	02082432	1 1/4" NPT	25 (95)	0.05	8.25" (210)	3.50" (89)	3.00" (76)
MSS-1 1/2	02082433	1 1/2" NPT	35 (135)	0.08	8.25" (210)	3.50" (89)	3.00" (76)
MSS-2	02082434	2" NPT	50 (190)	0.10	8.25" (210)	3.50" (89)	3.00" (76)
MSS-3	02082435	3" NPT	100 (380)	0.02	10" (254)	3.50" (89)	4.00" (102)

*B Dimension larger for SS20 versions
Notes:
1. Dimensions are in inches (mm).
2. Dimensions are for general information only, all critical dimensions should be verified by requesting a certified print.

HTMS Series

Tank Mounted Suction Strainer Elements

SAE O-Ring

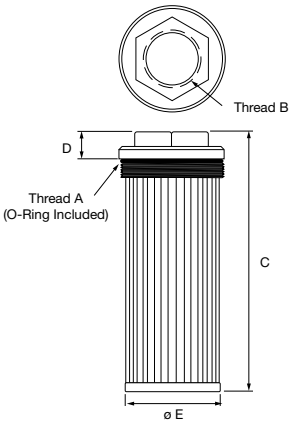

Model Code

HTMS SAE 16 100

Series

Thread Type

Thread B Size

Mesh Size
100 = 100 Mesh (149 micron)

Options
(omit) = Standard *(no bypass)*
RV3 = 3 psi bypass valve

Model Code	Part No.	Per SAEJ514 THD A	Per SAEJ514 THD B	Hex Size	GPM*	Screen Area (Sq. In.)	Dimensions C	Dimensions D	Dimensions ØE
HTMS SAE 16 100	02078472	2-1/2”-12	1-5/16”-12	2.13	9	90	9.00”	0.75”	2.24”
HTMS SAE 20 100	02078473	2-1/2”-12	1-5/8”-12	2.13	14	90	9.00”	0.75”	2.24”
HTMS SAE 24 100	02078474	3-3/8”-12	1-7/8”-12	2.50	21	230	8.80”	0.90”	3.22”
HTMS SAE 32 100	02078475	3-3/8”-12	2-1/2”-12	3.00	39	230	9.30”	0.98”	3.22”

Hose Barb

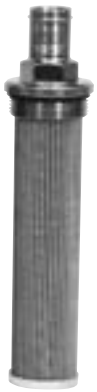

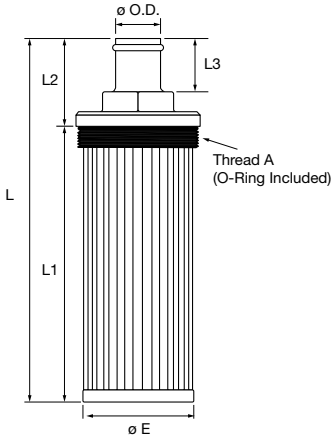

Model Code

HTMS HB 1/1.25 100

Series

Connection Type

Connection / Hex Size

Mesh
100 = 100 Mesh (149 micron)

Options
(omit) = Standard *(no bypass)*
RV3 = 3 psi bypass valve

Model Code	Part No.	Thread A	ø O.D.	Hex Size	GPM*	Dimensions L	Dimensions L1	Dimensions L2	Dimensions L3	Dimensions ø E
HTMS HB 1 / SAE 24 100	02078485	1-7/8”-12	1.00”	1.25”	8	9.30”	7.30”	2.00”	1.25”	1.65”
HTMS HB 1.25 / SAE 32 100	02078486	2-1/2”-12	1.25”	1.50”	14	10.00”	8.00”	2.00”	1.25”	2.12”
HTMS HB 1.5 / SAE 48 100	02078487	3-3/8”-12	1.50”	2.00”	21	10.30”	7.82”	2.48”	1.50”	3.22”
HTMS HB 2 / SAE 48 100	02078488	3-3/8”-12	2.00”	2.50”	40	10.80”	7.84”	2.97”	2.00”	3.22”

Weld Flange (SAE)

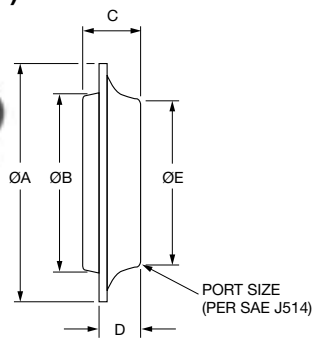

Model Code	Part No.	Port Size	Dimensions ØA	Dimensions ØB	Dimensions C	Dimensions D	Dimensions ØE
HTMS TWF-6	02078493	9/16”-18	1.50”	0.93”	0.56”	0.31”	1.00”
HTMS TWF-8	02078494	3/4”-16	1.50”	0.93”	0.56”	0.31”	1.00”
HTMS TWF-12	02078495	1-1/16”-12	2.13”	1.38”	0.69”	0.44”	1.44”
HTMS TWF-16	02078496	1-5/16”-12	2.38”	1.66”	0.75”	0.50”	1.75”
HTMS TWF-20	02078497	1-5/8”-12	2.69”	2.00”	0.75”	0.50”	2.13”
HTMS TWF-24	02078482	1-7/8”-12	3.00”	2.25”	0.75”	0.50”	2.38”
HTMS TWF-32	02078483	2-1/2”-12	3.50”	2.63”	0.84”	0.59”	2.88”
HTMS TWF-48	02078484	3-3/8”-12	4.63”	3.66”	1.00”	0.81”	3.94

*Flow ratings listed are nominal flow ratings for typical applications. High viscosity, low temperature applications may require a strainer with a higher flow rating. Consult HYDAC Engineering for more information.

Notes:
1. Dimensions are in inches (mm).
2. Dimensions are for general information only, all critical dimensions should be verified by requesting a certified print.

NPT

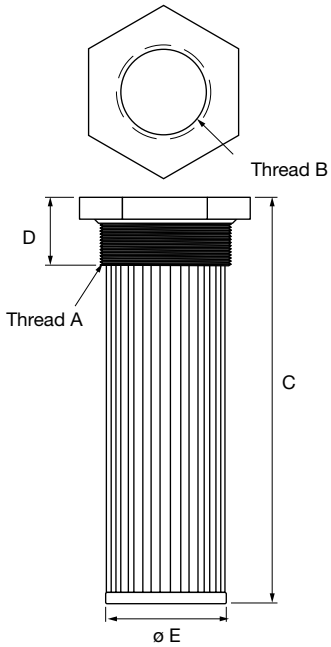

Model Code

HTMS NPT 1/2 100

Series — HTMS
Thread Type — NPT
Thread B Size — 1/2
Mesh — 100
100 Mesh (149 micron)
Options
(omit) = Standard *(no bypass)*
RV5 = 5 psi bypass valve

Model Code	Part No.	GPM*	Screen Area (Sq. In.)	THD A	THD B	Hex Size	Dimensions		
							C	D	ø E
HTMS NPT 1/2 100	02078460	5	35	1” NPT	1/2” NPT	1.43	5.38”	1.10”	1.18”
HTMS NPT 3/4 100	02078461	10	64	1 1/4” NPT	3/4” NPT	1.81	7.50”	1.20”	1.14”
HTMS NPT 1 100	02078462	15	86	1 1/2” NPT	1” NPT	2.00	8.25”	1.30”	1.65”
HTMS NPT 1 1/4 100	02078463	25	125	2” NPT	1 1/4” NPT	2.55	10.00”	1.30”	2.12”
HTMS NPT 2 100	02078464	50	260	3” NPT	2” NPT	3.30	10.25”	1.70”	3.03”
HTMS NPT 3 100	02078465	100	315	4” NPT	3” NPT	5.00	11.30”	1.80”	3.78”

Male NPT Ports

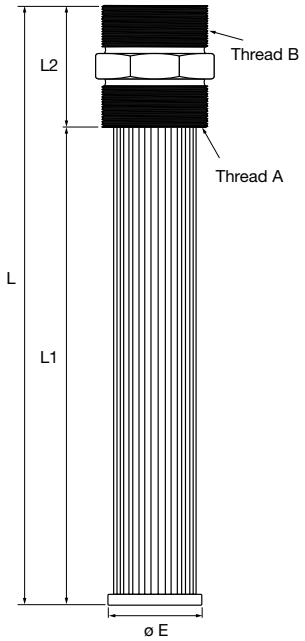

Model Code

HTMS NPTM 2 100

Series — HTMS
Thread Type — NPTM
Thread B Size — 2
Mesh Size — 100
100 Mesh (149 micron)
Options
(omit) = Standard *(no bypass)*
RV3 = 3 psi bypass valve

Model Code	Part No.	GPM*	THD A	THD B	Hex Size	Dimensions			
						L	L1	L2	ø E
HTMS NPTM 2 100	02078480	50	2” NPT	2” NPT	2.75”	13.50”	10.75”	2.70”	2.12”

*Flow ratings listed are nominal flow ratings for typical applications. High viscosity, low temperature applications may require a strainer with a higher flow rating. Consult HYDAC Engineering for more information.

Notes:
1. Dimensions are in inches (mm).
2. Dimensions are for general information only, all critical dimensions should be verified by requesting a certified print.

FSK Series

Fluid Level Indicator with Electric Level Switch

Dimensions

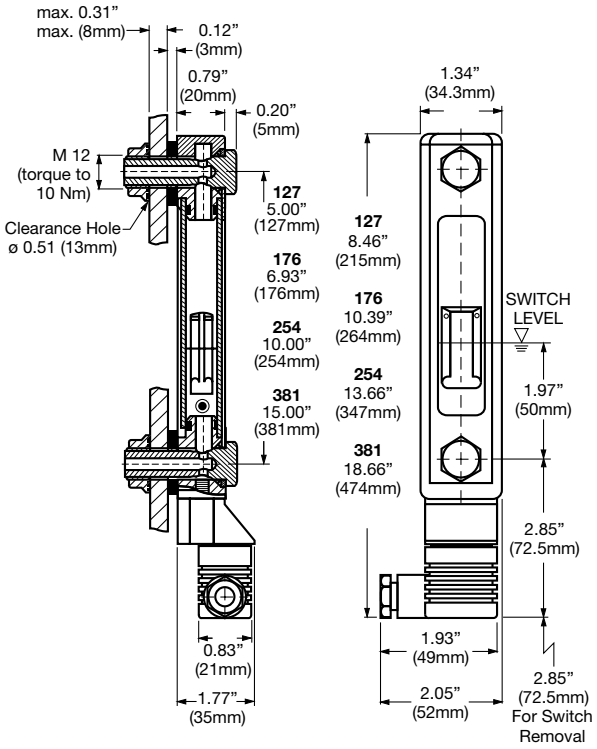

Notes:
1. Dimensions are in inches (mm).
2. Dimensions are for general information only, all critical dimensions should be verified by requesting a certified print.

Electric Level Switch

FSK...C *(open at normal level)*

Contacts **CLOSE** when fluid level drops **BELOW** switching level

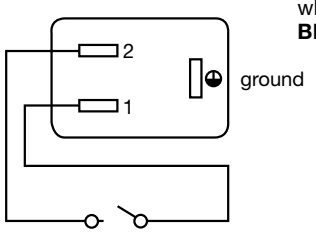

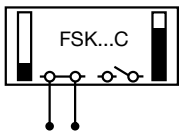

FSK...O *(closed at normal level)*

Contacts **OPEN** when fluid level drops **BELOW** switching level

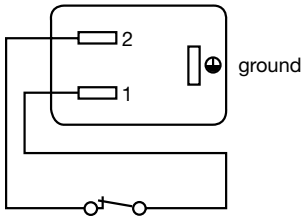

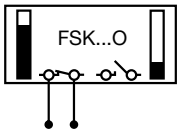

Model Code

FSK - 127 - 2 . 4 / 0 / _ / 12 _

Fluid Level Indicator
- FSK = Electrical and visual level indicator

Size *(Mounting Hole Centers)*
- 127 = 5 inches
- 176 = 7 inches
- 254 = 10 inches
- 381 = 15 inches

Seals
- 2 = Fluorocarbon

Modification Number
- 4 = FSK *(Determined by Manufacturer)*

Electrical Switch
- C = Open at Normal Level
- O = Closed at Normal Level

Thermometer
- *(omit)* = No Thermometer *(standard)*
- FT 100 = Probe Thermometer (100mm-3.94"LG)
- FT 200 = Probe Thermometer (200mm-7.87"LG)
- FT 300 = Probe Thermometer (300mm-11.87"LG)
- TS... = Thermo Switch *(see chart on page 141)*

Hex Head Bolt
- 12 = M12 x 1.75 Bolt
- 1/2 = 1/2-20 Bolt

Sight Tube
- *(omit)* = Polyamide construction *(not suitable for water glycols or high water-based fluids)*
- SO14 = Glass tube construction

Electrical Specifications

Contact Ratings
- Max. 8W

Maximum Voltage
- 50V AC or DC

Maximum Current
- 200 mA

Magnetic Float inside tube trips switch when fluid level drops within 50mm of lower bolt. *(see illustration)*

FSA Series

Fluid Level Indicator

Dimensions

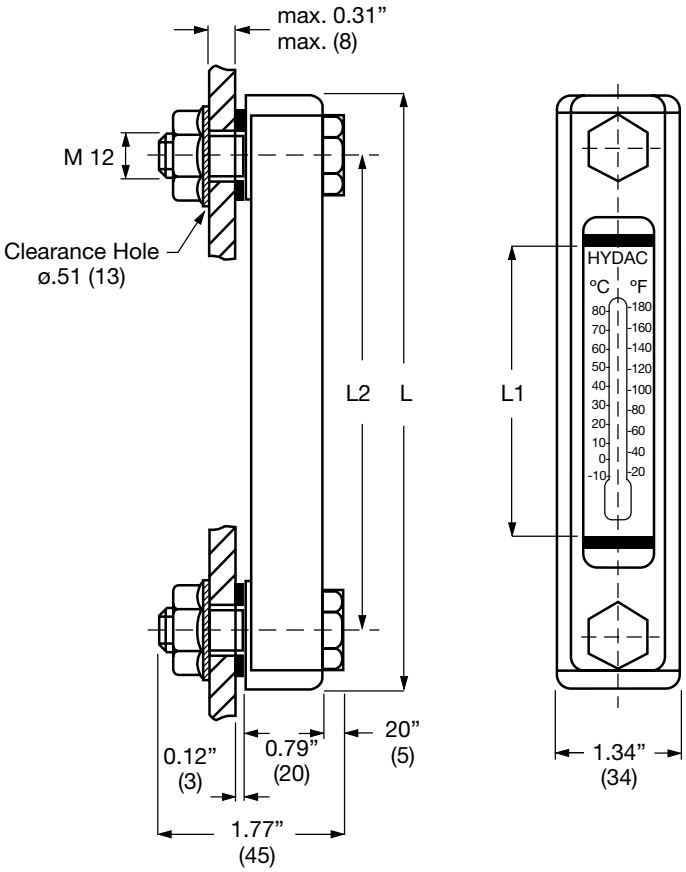

Size	L	L1	L2
76	4.25” (108mm)	1.46” (37mm)	2.99” (76mm)
127	6.26” (159mm)	2.99” (76mm)	5.00” (127mm)
176	8.19” (208mm)	4.92” (125mm)	6.93” (176mm)
254	11.26” (286mm)	7.99” (203mm)	10.00” (254mm)
381	16.26” (413mm)	12.99” (330mm)	15.00” (381mm)

Notes:
1. Dimensions are in inches (mm).
2. Dimensions are for general information only, all critical dimensions should be verified by requesting a certified print.

Model Code

FSA 127 - 1 . 1 / T / 12 - _

Fluid Level Indicator
- FSA = Visual level indicator

Size *(Mounting Hole Centers)*
- 76 = 3 inches
- 127 = 5 inches
- 176 = 7 inches
- 254 = 10 inches
- 381 = 15 inches
- 500 = 20 inches
- 600 = 24 inches
- 700 = 28 inches
- 762 = 30 inches
- 1000 = 39 inches

Seals
- 1 = NBR
- 2 = Fluorocarbon

Housing Material
- 0 = Steel *(only for SO14 glass tube construction)*
- 1 = Aluminum

Thermometer
- *(omit)* = No Thermometer
- T = Built-in Tube
- FT 100 = Probe Thermometer *(100mm-3.94”LG)*
- FT 200 = Probe Thermometer *(200mm-7.87”LG)*
- FT 300 = Probe Thermometer *(300mm-11.87”LG)*
- TS... = Thermo Switch *(see chart on page C2-11)*

Hex Head Bolt
- 12 = M12 x 1.75 Bolt
- 1/2 = 1/2-20 Bolt

Sight Tube Material
- *(omit)* = Polyamide construction *(not suitable for water glycols or high water-based fluids)*
- SO14 = Glass tube construction

Low Temperature options available

PN#02080105 / 01.17 / ACC1603-1753

Options

Electric Thermo Switch / TS

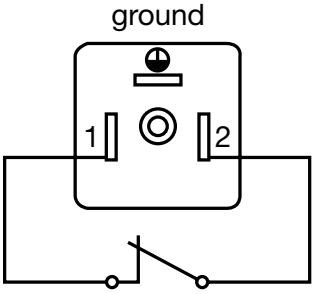

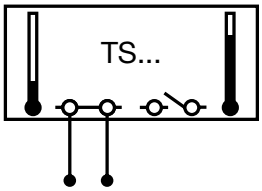

Contacts **OPEN**
when fluid temperature rises
ABOVE switching temperature

Electrical Specifications

Maximum Voltage

- 50 VAC or DC

Minimum Current

- 50 mA

Contact

- Normally Closed

Switching Tolerance

- ±10°F

Hysterisis

- TS 60/70 27°F (15°C)
- TS 80 36°F (20°C)

Expected Life Cycle

- at 25 A / 50 V 10,000 cycles
- at 0.5 A / 50 V 100,000 cycles

Thermo Switch - TS...

Detail of Lower Connection
for Probe Thermometer (FT...) see chart below

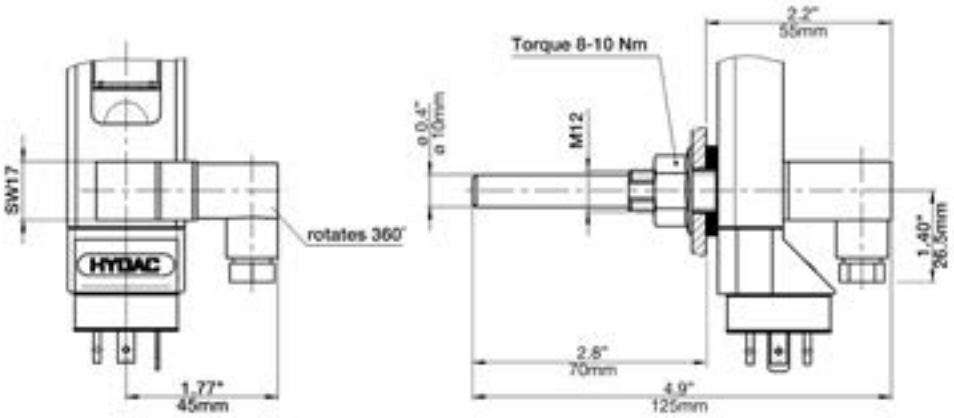

Thermo Switches *(Normally Closed Contact)*

Thermo Switch Code	Model Code	Part Number	Switch Opens @	Switch Closes @	Mounting Thread
TS60	TS-L-60/X/12 THERMO-SWITCH	03252752	60°C/140°F	45°C/113°F	M 12
TS70	TS-L-70/X/12 THERMO-SWITCH	03252766	70°C/158°F	55°C/131°F	M 12
TS80	TS-L-80/X/12 THERMO-SWITCH	03252767	80°C/176°F	60°C/140°F	M 12

Probe Thermometer / FT Features

- Analog dial type thermometer for visual temperature indication

Temperature Range *(Dual Scale)*

- 0° to 212°F
- 0° to 100°C

Detail of Lower Connection

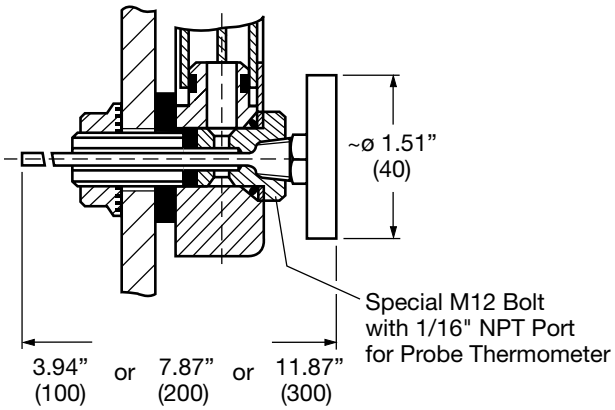

Probe Thermometers *Temperature Range 32° to 212°F (0° to 100°C)*

Thermo Switch Code	Model Code	Part Number	Mounting Thread
FT100	FT-100 TEMP PROBE W/M12 BOLT	02067556	M 12
FT200	FT-200 TEMP PROBE W/M12 BOLT	00086740	M 12
FT300	FT-300 TEMP PROBE W/M12 BOLT	00086741	M 12

Technical Data

Material	
Housing	Anodized Aluminum or ABS Plastic
Sight Tube	Polyamide or Glass
Seals	Fluorocarbon, NBR
Nuts / Bolts	Steel, Zinc plated
Fluid Temperature	-4° to 176°F (-20° to 80°C)
Maximum Pressure	14.5 PSI (1 BAR)
Thermometer Range	
Type T (FSA only)	14° to 176°F (-10° to 80°C)
Type FT100	32° to 212°F (0° to 100°C)
Type FT200	32° to 212°F (0° to 100°C)
Type FT300	32° to 212°F (0° to 100°C)
Bolting Torque	Max. 8 LB-FT+1 (10 Nm +2) see installation instructions below

Recommended Installation Process

1. Drill mounting holes (13 mm) according to dimension L2.
2. Torque the Nut, item 9, to 8+ 1 LB-FT. If it is not possible to torque the nut, the bolt head must be torqued.
   To avoid damaging the indicator a washer is recommended to be used under the bolt head.
   This washer is available from HYDAC: Part Number 00001689.
   Washer Dimensions: øD 18.8 mm, ID 13.10 mm, 0.5 mm thick

Component Parts

Item	Description		Part No.	Quantity FSA	Quantity FSK
1	Housing		-	1	1
2	Name Plate		-	1	-
3	Tube		-	1	1
4*	O-ring 13X2.5	FPM-70 (Fluorocarbon)	00601916	2	2
		NBR-70 (Buna)	00601047		
5	Tube Connector		-	2	2
6*	O-ring 12.3X2.4	FPM-70 (Fluorocarbon)	00601531	2	2
		NBR-70 (Buna)	00601045		
7*	Washer FSA/FSK	FPM (Fluorocarbon)	22183158	2	2
		NBR (Buna)	00271948		
8*	Bolt M12 SW17 FSA		22183153	2	2
9*	Nut Hex M12 FSA		22183151	2	2
10	Thermometer *(In Tube)*		-	1	-
11*	Probe Thermometer		See pg. C2-11	1	1
12*	Bolt FSA/K M12 SW17 for FT Temp Probe		03126743	1	1
13	Magnetic Float		-	-	1
14	Base Assembly w/Type “C” Switch		-	-	1
15	Base Assembly w/Type “O” Switch		-	-	1
16*	Washer FSA/FSK Steel		00001689	2	2

* items may be purchased individually.

FSA & FSK

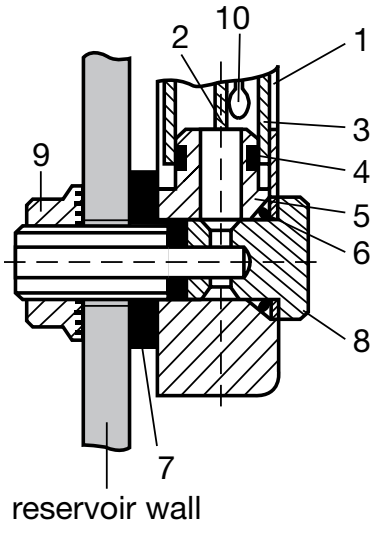

FSK Only

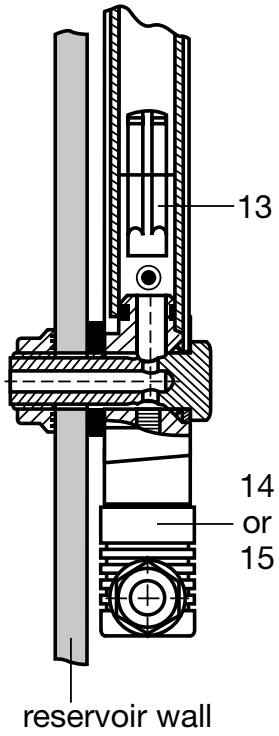

MA Series

Single Gauge Isolator

Description

- Gauge life is extended by using the MA 1 when reading pressure. When not reading pressure, the gauge is vented to tank to protect the gauge against pressure from the system.
- There are two ways to operate the MA 1:
  - Push to read *(spring return)*
  - Push and rotate clockwise to lock in for continuous pressure reading

Specifications

Mounting

- Panel installation maximum 0.39”

Connections

- 1/4” NPT, SAE-5, or G1/4 *(Ports M, P, T)*

Weight

- 0.88 lbs./0.4 kg

Mounting Position

- Horizontal or Vertical

Operating Fluid

- Mineral Oils

Hydraulic Data

Operating Pressure

- P max. 5075 psi/350 bar *(T-Port max. 145 psi/10 bar)*

Temperature Range

- -4° to 176°F (-20° to 80°C)

Model Code

MA 1 . A 1 0 / 5 V

Gauge Isolator Single Station

Design
1 = Push/Rotating Control Knob

Connection
A = Threaded

Type Number

Modification Number

Port Configuration

0	=	BSPP Thread (G1/4)	Part No. 02057942
5	=	1/4” NPT Thread	Part No. 02057940
12	=	SAE-5 (1/2”-20 UNF)	Part No. 02057941

Seals
V = Fluoroelastomer Seals *(standard)*

Hydraulic Symbol

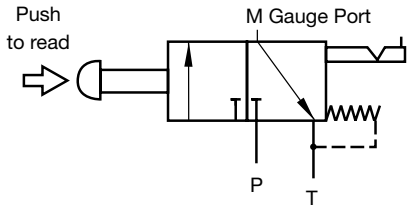

Dimensions

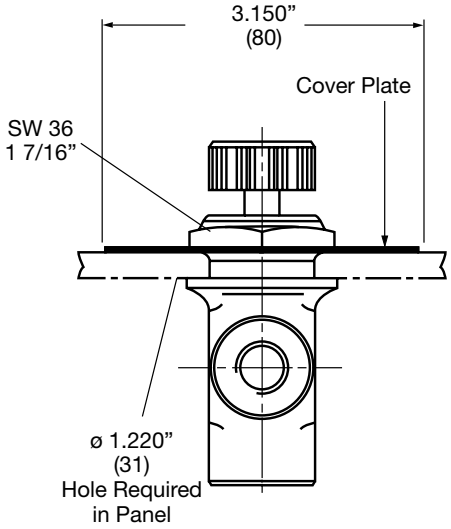

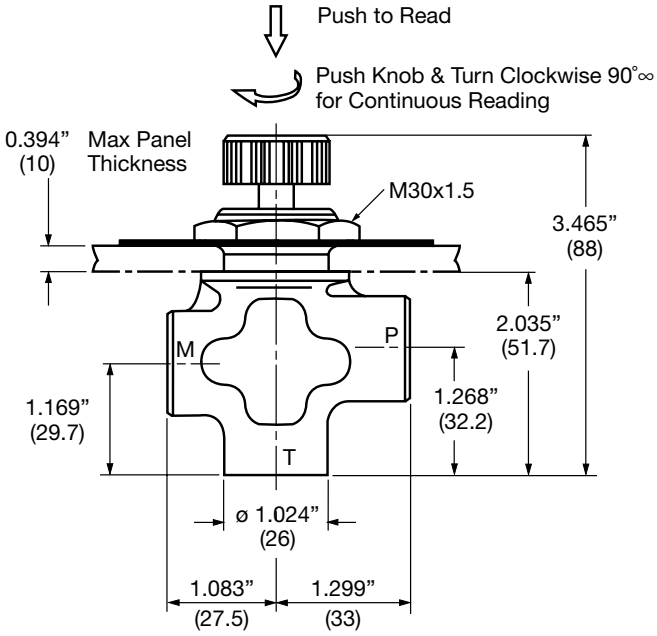

Notes:
1. Dimensions are in inches (mm).
2. Dimensions are for general information only, all critical dimensions should be verified by requesting a certified print.

MSL Series

Zero Leakage Multi-Station Gauge Isolators with Integral Gauge

Specifications

Mounting Method

- Flange mounting via four 1/4" bolts. It is recommended that the measuring points with pressures of over 1450 psi (100 bar) be arranged symmetrically. Ports not in use should be plugged.

Weight

- 3.8 lbs. / 1.7 kg.

Mounting Position

- Optional

Fluids

- General purpose hydraulic oil. For other fluids, contact **HYDAC** for information.

Type of Connections

- 6 measuring points
- 1 tank connection

Model Code

MSL 2 G 2 . 0 / 315 V

Multi-Station Gauge Isolator
MSL = Zero Leakage Model

Model
2 = with Built-in Pressure Gauge

Type and Size of Connection (All Ports)
G = 1/4" NPT
H = SAE-4 (7/16"-20 UNF)
A = BSPP (G1/4)

Type Number

Modification Number

Gauge Indication Range

Size	Operating Pressure Zone *(Black Scale)*	Over Pressure Zone *(Red Scale)*
40	0 - 570 psi (0 - 40 bar)	570 - 900 psi (40 - 63 bar)
63	0 - 900 psi (0 - 63 bar)	900 -1400 psi (63 - 100 bar)
100	0 - 1400 psi (0 - 100 bar)	1500 - 2300 psi (100 - 160 bar)
180	0 - 2600 psi (0 - 180 bar)	2600 - 3600 psi (180 - 250 bar)
315	0 - 4500 psi (0 - 315 bar)	4500 - 5700 psi (315 - 400 bar)

Supplementary Details
(omit) = Buna Seals
V = Viton Seals

Hydraulic Data

Operating Pressure Range

- Max. operating pressure at measuring points 1- 6 4500 psi (315 bar)
- Max. Tank connection pressure 145 psi (10 bar)

Fluid Temperature Range

- - 5° to 160°F (-20° to 70°C)

Gauge Accuracy

- Built-in gauge accuracy is ±1.6% of the max. scale value at 68°F (20°C). The error per additional 50°F (10°C) temperature increase is +0.3% and 50°F (10°C) temperature reduction is -0.3%. Values are based on red scale indication.

Hydraulic Symbol

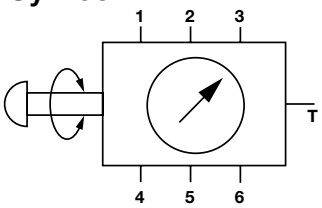

Dimensions

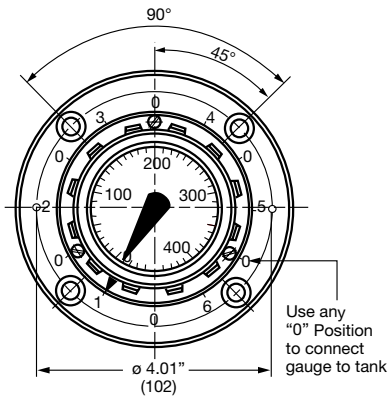

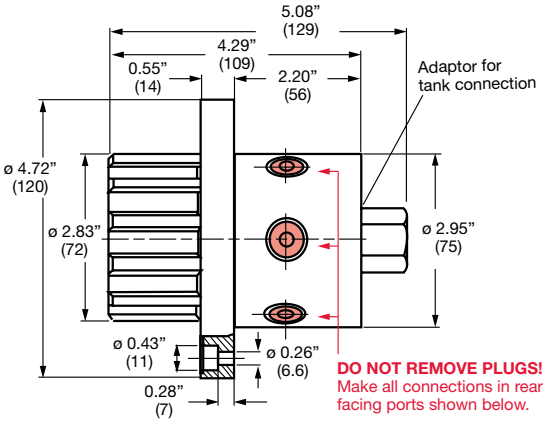

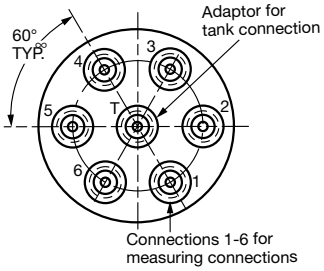

Notes:
1. Dimensions are in inches (mm).
2. Dimensions are for general information only, all critical dimensions should be verified by requesting a certified print.

PN#02080105 / 01.17 / ACC1603-1753

MS Series

Multi-Station Gauge Isolators

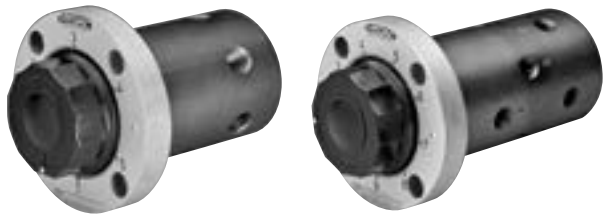

Model Code

MS 4 A 2 . 1 / 5 V

Multi-Station Gauge Isolator

Model
- 4 = Turn and press to read *(6 positions)*
- 5 = Turn to read *(5 positions)*
- 6 = Turn and press to read *(9 positions)*
- 7 = Turn to read *(8 positions)*

Type and Size of Connections
- A = Threaded Connections

Type Number

Modification Number

Port Type
- 5 = NPT Port *(1/4" for MS 4 & 5 only)*
- 12 = SAE Port *(SAE-4 for MS 4 & 5 only)*
- 0 = BSPP *(1/4" for MS 4 & 5 and 1/8" for MS 6 & 7)*

Seals
- *(omit)* = Buna N
- V = Fluoroelastomer Seals

Specifications

Mounting Method

- Flange mounting via four 1/4" bolts. It is recommended that the measuring points with pressures of over 1450 PSI / 100 Bar be arranged symmetrically. Ports not in use should be plugged.

Weights

- **MS 4 & MS 5** 3.1 lbs. / 1.4 kg.
- **MS 6 & MS 7** 4.2 lbs. / 1.9 kg.

Mounting Position

- Optional

Fluids

- General purpose hydraulic oil. For other fluids, contact the HYDAC office for information.

Types of Connections

- **MS 4 / MS 6**
  1 gauge connection (M)
  1 tank connection (T)
- **MS 5 / MS 7**
  1 gauge connection (M)
  1 tank connection (T)
  1 leakage connection (L)

Hydraulic Data

Operating Pressure Range

- **MS 4 / MS 5 / MS 6 / MS 7**
  Max. operating pressure range at measuring points 4500 psi (315 bar)
- Max. tank and leakage connection pressure 145 psi (10 bar)

Fluid Temperature Range

- - 5° to 160°F (-20° to 70°C)

Hydraulic Symbol

M = Gauge (measuring) connection
T = Tank connection
L = Leakage connection

Type MS 4

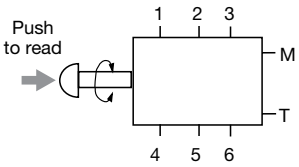

Type MS 6

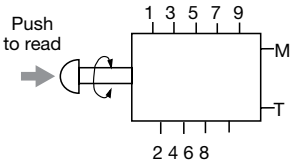

Type MS 5

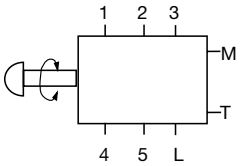

Type MS 7

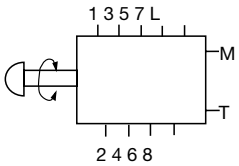

See dimensions next page.

Dimensions

Type MS 4

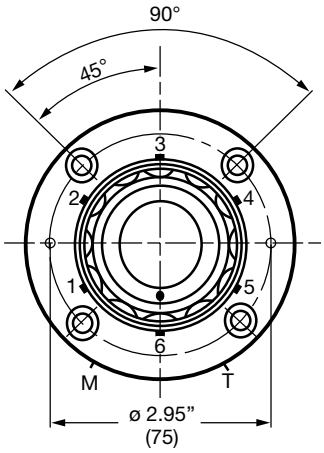

Push to read pressure, release to connect gauge back to tank

Type MS 5

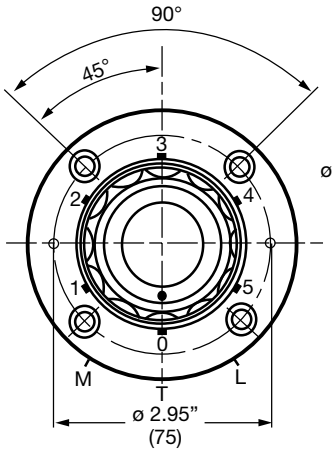

Turn to "0" position to connect gauge back to tank

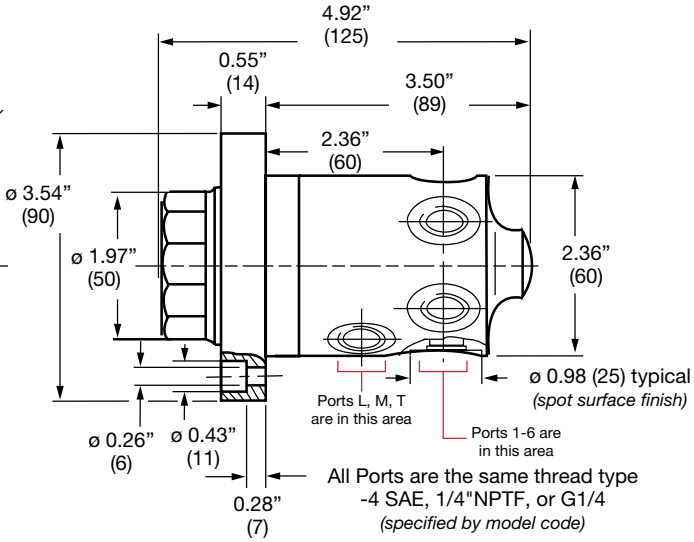

Type MS 6

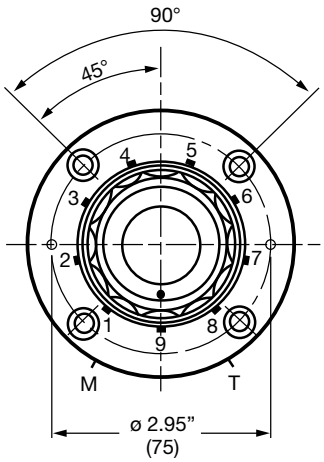

Push to read pressure, release to connect gauge back to tank

Type MS 7

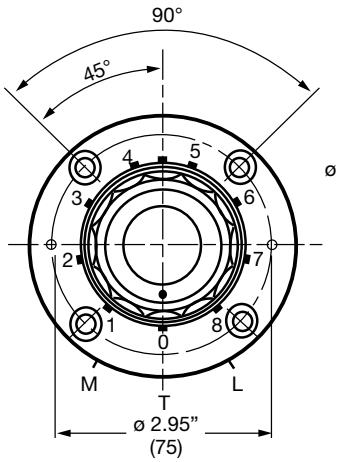

Turn to "0" position to connect gauge back to tank

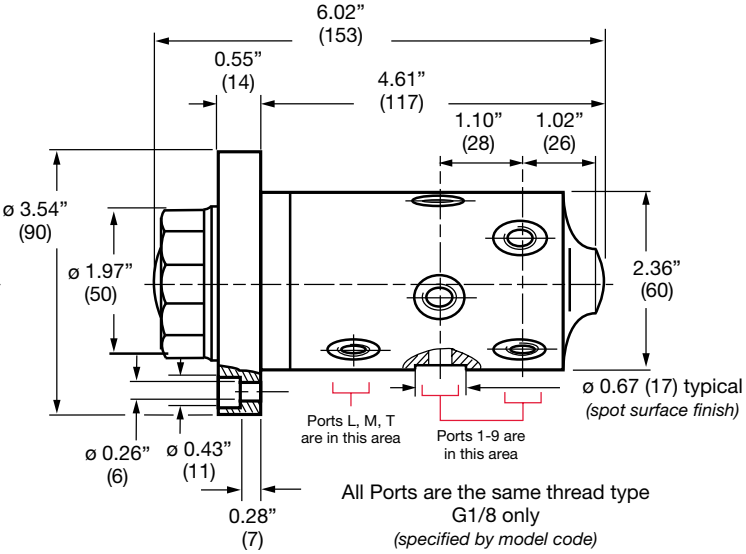

Notes:
1. Dimensions are in inches (mm) and lbs (kg).
2. Dimensions are for general information only, all critical dimensions should be verified by requesting a certified print.

1620 Series

Test Points & Micro Bore Flex Hoses

Description

HYDAC series 1620, guided piston design, Test Points are compact, self sealing couplings that provide access to hydraulic and pneumatic systems for pressure measurement to 9000 psi. Mating adapters or hose connections can be connected without loss of fluid while the system is operating. Test Points can also be used to take oil samples or to bleed air from hydraulic systems. They are available in 1620 (M16x2.0) connection threads with a variety of screw-in port configurations.

Features

- Can be coupled and uncoupled under pressure without system shutdown or fluid loss
- Patented guided piston design for leak free performance at operating pressure to 9000 psi
- HYDAC guided piston design provides the following advantages over ball seal design:
  - Higher working Pressure
  - Better sealing characteristics particularly under high vibration
  - Less susceptible to fluid contamination
  - Can be used for gas as well as fluid
- Low temperature options available

Applications

- Pressure measurement with gauges or sensors
- Fluid sampling
- Air bleeding

Technical Data

Maximum Working Pressure

- 9000 psi (630 bar)
  (see pressure utilization factor to adjust for operating temperature)

Fluid Compatibility

- Suitable for petroleum-based fluids and gaseous media

Materials

- Zinc plated steel body *(standard)*
- Zinc plated metal cap *(standard)*

Seals

- Buna-N *(standard)*
- Fluoroelastomer *(standard)*

Temperature Range

- With metal cap and Buna-N seals:
  -13° to 212°F (-25° to 100°C)

Options

- Anti-vibration seal for metal cap

Series 1620 Test Point

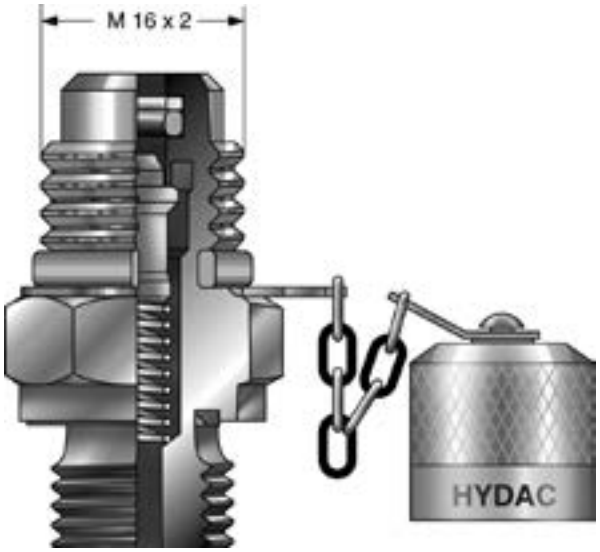

Guided Piston Design

1620 Series

Dimensions

Standard 1620 Test Point Connection with Cap

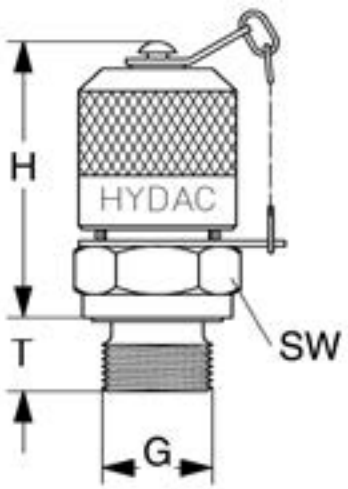

Select desired connection in the chart to the right

Note: All Test Points have a male connection thread (G)

Carbon Steel Test Points *(Zinc-Plated, Buna N Seals)*

Thread G	P max	H (mm)	T (mm)	SW (mm)	Part No.
1/8 NPTF	5800 psi (400)	33	13	17	06003734
1/4 NPTF	5800 psi (400)	33	16.5	17	00639645
7/16-20 UNF	9000 psi (630)	37	9	17	06003735
9/16-18 UNF	9000 psi (630)	36	10	19	06003737
M 8x1	3600 psi (250)	41	8.5	17	06003731
M 10x1	3600 psi (250)	37.5	8.5	17	00629237
M 12x1.5	9000 psi (630)	36	10	17	00632615
M 14x1.5	9000 psi (630)	36	10	19	00632248
M 16x1.5	9000 psi (630)	36	10	22	06003732
ISO 228-G 1/8	5800 psi (400)	38	8	17	00689901
ISO 228-G 1/4	9000 psi (630)	36	10	19	00680107
ISO 228-G 3/8	9000 psi (630)	36	10	22	06003733
ISO 7/I-R 1/8	5800 psi (400)	33	13	17	06003738
ISO 7/I-R 1/4	9000 psi (630)	33	13	17	06003739

Carbon Steel Test Points *(Zinc-Plated, Fluoroelastomer Seals)*

Thread G	P max	H (mm)	T (mm)	SW (mm)	Part No.
1/8 NPTF	5800 psi (400)	33	13	17	06007199
1/4 NPTF	5800 psi (400)	33	13	17	06007200
7/16-20 UNF	9000 psi (630)	37	9	17	06007029
9/16-18 UNF	9000 psi (630)	36	10	19	06007030
ISO 228-G 1/4	9000 psi (630)	36	10	19	00606304

Stainless Steel Test Points *(Fluoroelastomer Seals)*

Thread G	P max	H (mm)	T (mm)	SW (mm)	Part No.
1/4 NPTF	5800 psi (400)	33	13	17	02701487
7/16-20 UNF	5800 psi (400)	33	16.5	17	02701486

Notes:
1. Dimensions are in mm and psi (bar).
2. Dimensions are for general information only, all critical dimensions should be verified by requesting a certified print.
3. For port configuration drawings contact HYDAC.

Micro Bore Flexible Hoses

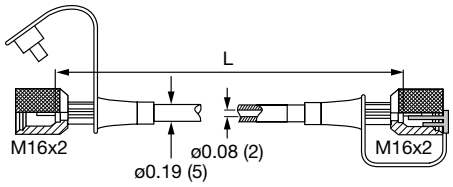

L (inches)	L (mm)	Part No.
8	200	06003723
12	300	06003724
16	400	00632633
20	500	06003725
25	630	06003726
31	800	00682857
39	1000	00632634
49	1250	06003727
59	1500	00682858
79	2000	00682859
98	2500	00682860
126	3200	06003728
157	4000	06003729
197	5000	06003730
236	6000	02701721
394	10,000	02701722

Pressure Utilization Factor for Hoses

Operating Temp.	Factor	Max. Pressure
122°F (50°C)	100%	9000 psi
176°F (80°C)	86%	7740 psi
212°F (100°C)	77%	6930 psi

Specifications

- Maximum working pressure 9000 psi (630 bar) at 122°F (50°C)
  (see pressure utilization factor to adjust for higher temperatures)
- Suitable for petroleum-based fluids
- Temperature range -4° to 122°F (-20° to 50°C) at max. pressure
- Polyamid core with polyester braid reinforcement and polyamid jacket
- Plastic dust cap
- 1620 female connection at both ends
- Bending radius: min. 20mm
- Hose ID ø 2mm
- Custom Hose Assemblies Available:
  NPT Male Thread, NPT Female Thread, JIC Male Hose, JIC Female swivel hose ends

1620 Series Adapters

Direct Gauge Adapter

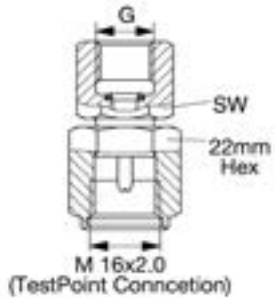

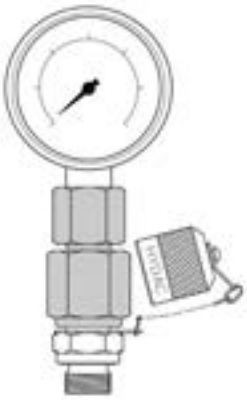

Test DGA 1620 (thread G)

Thread G	Pmax	SW	Part No.
ISO 228-G 1/4	9000 (630)	19	06003824
ISO 228-G 1/2	9000 (630)	27	06003825
1/4 NPT	9000 (630)	19	06003769
SAE-4 7/16-20 UNF	9000 (630)	9	02083643

Note: There is no check valve inside of this adapter. For permanent gauge installation only.

Hose to Gauge Bulkhead Adapter (with provisions for panel mounting)

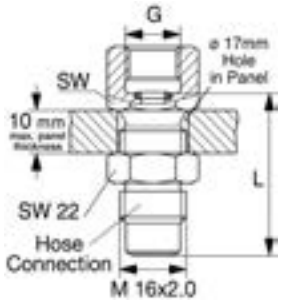

Test HGA Bulk 1620 (thread G)

Thread G	Pmax	L	SW	Part No.
ISO 228-G 1/4	9000 (630)	38.5	19	06003822
ISO 228-G 1/2	9000 (630)	39.5	27	06003823
1/4 NPT	9000 (630)	38.5	19	06003768

Note: There is no check valve inside of this adapter. For permanent gauge installation only.

Straight Coupling for Hose to Hose Connections

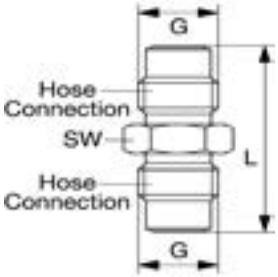

Test HHA 1620 (thread G)

Thread G	Pmax	L	SW	Part No.
M 16x2.0	9000 (630)	42	22	00687889

Note: There is no check valve inside of this adapter.

Standpipe Adapter 37° JIC Fitting

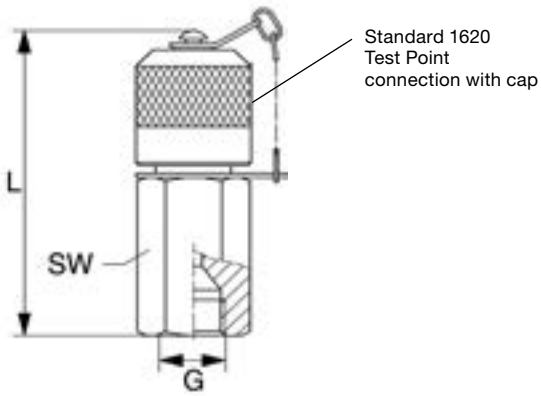

Test 37DEG 1620 (thread G)

Thread G	Pmax	L	SW	Part No.
7/16”-20 UNF	9000 (630)	55	17	06003792
1/2”-20 UNF	6000 (420)	56.5	17	06003793
9/16”-18 UNF	4500 (315)	57.5	19	06003794
3/4”-16 UNF	4500 (315)	60.5	22	06003795

Notes:
1. Dimensions are in mm and psi (bar).
2. Dimensions are for general information only, all critical dimensions should be verified by requesting a certified print.

1620 Series

Test Point Kits

3 Gauge Kit

5 Gauge Kit

Model Code	Part Number	3 Gauge Quantity	5 Gauge Quantity
Test Point Kit 1620 3 Gauge	**02081635**	-	-
Test Point Kit 1620 5 Gauge	**02081636**	-	-
HPG-63-1000-LM	02701547	1	1
HPG-63-1500-LM	02701548	0	1
HPG-63-2000-LM	02701549	1	1
HPG-63-3000-LM	02701550	0	1
HPG-63-5000-LM	02701551	1	1
TEST HOSE 1620 12”	06003724	1	2
TEST HOSE 1620 39”	00632634	1	2
TEST HOSE 1620 79”	00682859	1	2
Test Point 1620 (1/4 NPTF) MC/NBR	00639645	2	4
Test Point 1620 (7/16-20 UNF) MC/NBR	06003735	2	4
Test Point 1620 (9/16-18 NPTF) MC/NBR	06003737	2	4
TEST DGA 1620 (1/4 NPT)	06003769	1	3
TEST HGA BULK 1620 (1/4 NPT)	06003768	1	3
TEST HHA 1620	00687889	1	3

1215 Series

Test Points *(M12 x 1.5 Threads)*

Standard design is zinc plated steel, buna seals, plastic cap and integrated safety device against vibration.

Test Hoses

L(in)	Model Code	Part No.
25	Test Hose 1215 25”	02701307
59	Test Hose 1215 59”	02701377

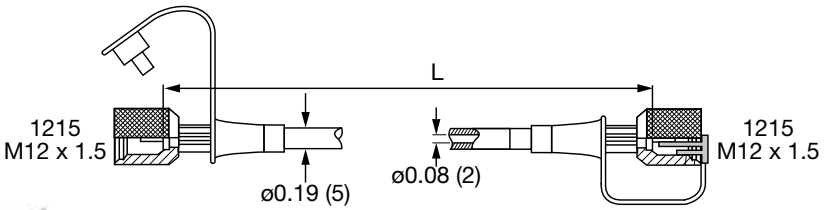

Dimensions

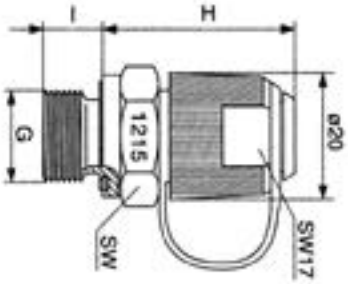

Thread (G)	p (max)	H	I	SW	Model Code	Part Number
ISO 228-G 1/8	5800 (400)	33	8	14	Test Point 1215 (G1/8) PC/NBR	–
ISO 228-G 1/4	9000 (630)	32	10	19	Test Point 1215 (G1/4) PC/NBR	–
1/8 NPTF	5800 (400)	29	12	14	Test Point 1215 (1/8 NPT) PC/NBR	–
1/4 NPTF	9000 (630)	29	15	14	Test Point 1215 (1/4 NPT) PC/NBR	02701305
7/16-20 UNF	9000 (630)	32	9	17	Test Point 1215 (7/16-20 UNF) PC/NBR	02701293
9/16-18 UNF	9000 (630)	32	10	19	Test Point 1215 (9/16-18 UNF) PC/NBR	02701335

Notes:
1. Dimensions are in mm and psi (bar).
2. Dimensions are for general information only, all critical dimensions should be verified by requesting a certified print.

Gauges

2 1/2” face - 1/4” NPT Connection

Specifications

Accuracy: ±1.5% of span

Scale: PSI outside in black
BAR inside in red

Connection: 1/4” NPT male

Materials

Case: Stainless Steel

Ring: Polished SS, crimped

Wetted Parts: Copper Alloy

Window: Polycarbonate

Dial: White ABS

Pointer: Black Aluminum

Liquid Filling: Glycerine

Model Code	Part Number	Pressure Range	Connection - 1/4” NPT
HPG-63-1000-LM	02701547	0 to 1000 psi	Lower Mount (LM)
HPG-63-1500-LM	02701548	0 to 1500 psi	Lower Mount (LM)
HPG-63-2000-LM	02701549	0 to 2000 psi	Lower Mount (LM)
HPG-63-3000-LM	02701550	0 to 3000 psi	Lower Mount (LM)
HPG-63-5000-LM	02701551	0 to 5000 psi	Lower Mount (LM)
HPG-63-2000-CBM	02701552	0 to 2000 psi	Center Back Mount (CBM)

Split Flanges

SAE Code 61 & 62

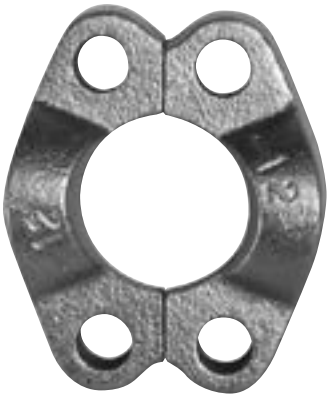

front view

back view

Materials

- Plated Carbon Steel
- Stainless Steel

Pressure Rating

- Code 61: 3000 psi
- Code 62: 5000 psi

Dimensions

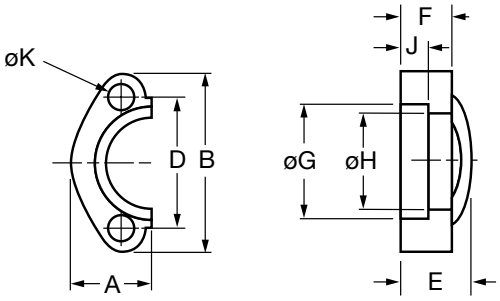

Code 61 Split Flanges *(sold in pairs - each pair makes a single connection)*

Size	Part Number (Carbon Steel)	Part Number (Stainless Steel)	A	B	D	E	F	ØG	ØH	J	ØK
0.50	02701585	02701539	0.86	2.12	1.50	0.75	0.50	1.22	0.96	0.245	0.344
0.75	02055588	02701540	0.98	2.56	1.88	0.88	0.56	1.53	1.27	0.245	0.406
1.00	02055704	02700970	1.11	2.75	2.06	0.94	0.62	1.78	1.52	0.295	0.406
1.25	02055715	02701541	1.39	3.12	2.31	0.88	0.56	2.03	1.72	0.295	0.469
1.50	02055720	02700919	1.58	3.69	2.75	1.00	0.62	2.41	2.00	0.295	0.531
2.00	02055735	02701542	1.86	4.00	3.06	1.03	0.62	2.84	2.47	0.355	0.531

Code 62 Split Flanges *(sold in pairs - each pair makes a single connection)*

Size	Part Number (Carbon Steel)	Part Number (Stainless Steel)	A	B	D	E	F	ØG	ØH	J	ØK
0.50	02701585	02701537	0.89	2.22	1.59	0.88	0.62	1.28	0.97	0.285	0.344
0.75	02055882	02700540	1.14	2.81	2.00	1.12	0.75	1.66	1.28	0.325	0.406
1.00	02055883	02700916	1.33	3.19	2.25	1.31	0.94	1.91	1.53	0.355	0.469
1.25	02055889	02701538	1.48	3.75	2.63	1.50	1.06	2.16	1.75	0.385	0.531
1.50	02055890	02700544	1.83	4.44	3.13	1.69	1.19	2.53	2.03	0.475	0.656
2.00	02055891	02700847	2.20	5.25	3.81	2.06	1.44	3.16	2.66	0.475	0.781

Notes:
1. Dimensions are in inches.
2. Dimensions are for general information only, all critical dimensions should be verified by requesting a certified print.

Notes

Ordering HYDAC Literature...

HYDAC literature is available for download via our website, **www.hydac-na.com** then click on the **Downloads** button to proceed with downloading your choices. Printed copies may be ordered by emailing us at **HYD.catalog@hydac-na.com** using the appropriate Part Number (PN) and name. Other brochures, manuals and technical documents are also available when ordering from our website.

Overview Brochure
PN02088157

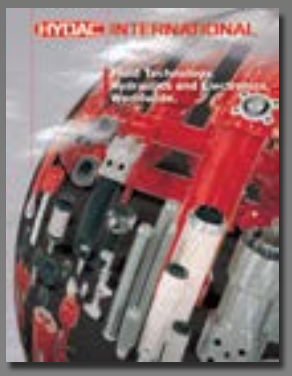

Filters Catalog
PN02081318

Accumulators Catalog
PN02068195

Electronics Catalog*
(online only)

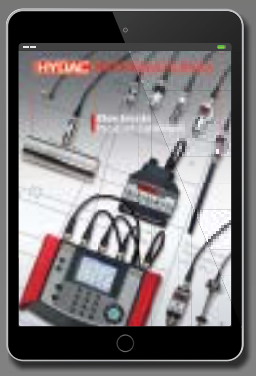

Compact Hydraulics
Catalog - PN02087369

Standard Coolers
Catalog - PN02085359

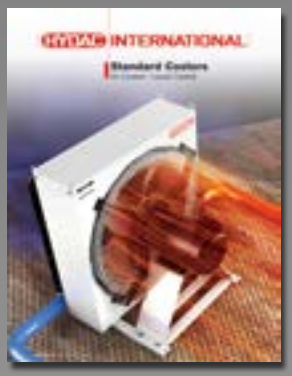

Filter Systems Catalog
PN02075860

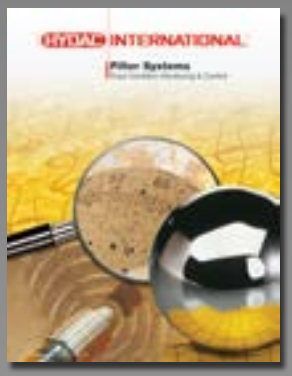

Control Technology*
Catalog (online only)

Accessories Catalog
PN02080105

Mobile Valves Brochure
PN02092408

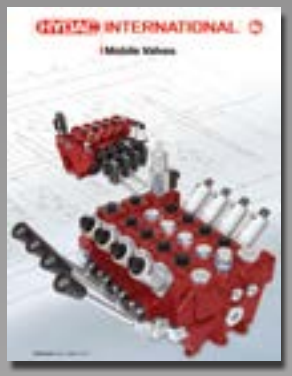

Hydraulic Cylinders
Brochure (Release: TBD)

Process Technology*
Catalog (online only)

***These catalogs are digital file versions only.**

Various market and product brochures are also available for ordering.

HYDAC TECHNOLOGY CORPORATION
HYDAC CORPORATION

2260 City Line Road
Bethlehem, PA 18017

+1.610.266.0100

HYD.catalog@hydac-na.com
www.hydac-na.com

PN#02080105 / 01.17 / ACC1603-1753

HYDAC INTERNATIONAL

Global Headquarters
HYDAC INTERNATIONAL GMBH

Industriegebiet
D – 66280 Sulzbach/Saar
Germany

Tel.: +49 6897 509-01

Fax: +49 6897 509-577

Internet: **www.hydac.com**
Email: info@hydac.com

HYDAC North America Locations

USA

www.HYDAC-NA.com

HYDAC TECHNOLOGY CORPORATION
Filter Division
2260 City Line Road
Bethlehem, PA 18017
+1.610.266.0100

HYDAC TECHNOLOGY CORPORATION
Accessory Division
2204 Avenue C
Bethlehem, PA 18017
+1.610.266.0100

HYDAC TECHNOLOGY CORPORATION
Electronic Division
Process Filter Division

HYDAC CORPORATION
Accumulator Division
90 Southland Drive
Bethlehem, PA 18017
+1.610.266.0100

HYDAC TECHNOLOGY CORPORATION
Filter System Division
Process Filter Division
580 West Park Road
Leetsdale, PA 15056
+1.724.318.1100

HYDAC TECHNOLOGY CORPORATION
Hydraulic Division
450 Windy Point Drive
Glendale Heights, IL 60139
+1.630.545.0800

HYDAC TECHNOLOGY CORPORATION
Mobile Hydraulic Division
1660 Enterprise Parkway • Suite E
Wooster, OH 44691
+1.610.266.0100

HYDAC CYLINDERS LLC
540 Carson Road North
Birmingham, AL 35217
+1.205.520.1220

HYDAC TECHNOLOGY CORPORATION
Cooling System Division
1051 Airlie Parkway
Denver, NC 28037
+1.610.266.0100

HYDAC TECHNOLOGY CORPORATION
Cooling System Division
445 Windy Point Drive
Glendale Heights, IL 60139
+1.630.545.0800

HYDAC TECHNOLOGY CORPORATION
HYDAC CORPORATION
Sales Office & Operations
1718 Fry Road, Suite 100
Houston, TX 77084
+1.281.579.8100

HYDAC TECHNOLOGY CORPORATION
HYDAC CORPORATION
NE Sales Office
1660 Enterprise Parkway • Suite E
Wooster, OH 44691
+1.610.266.0100

HYDAC TECHNOLOGY CORPORATION
HYDAC CORPORATION
SE Sales Office
1051 Airlie Parkway
Denver, NC 28037
+1.610.266.0100

HYDAC TECHNOLOGY CORPORATION
HYDAC CORPORATION
NW Sales Office
1201 NE 144th St. Bldg. B, Suite 111
Vancouver, WA 98685
+1.610.266.0100

HYDAC TECHNOLOGY CORPORATION
Hydraulic Division – Tech Center
430 Windy Point Drive
Glendale Heights, IL 60139
+1.630.545.0800

Canada

www.HYDAC-NA.com

HYDAC CORPORATION
14 Federal Road
Welland, Ontario, Canada L3B 3P2
+1.905.714.9322

HYDAC CORPORATION
Sales Office
Montreal, Québec, Canada J2M 1K9
+1.877.539.3388

HYDAC CORPORATION
Sales Office
5160 75 Street NW
Edmonton, Alberta, Canada T6E 6W2
+1.780.484.4228

Mexico

www.HYDACmex.com

HYDAC INTERNATIONAL SA de CV
Calle Alfredo A Nobel No 35
Col Puente de Vigas
Tlalnepantla, Edo Mexico
CP 54090
Mexico
+011.52.55.4777.1262